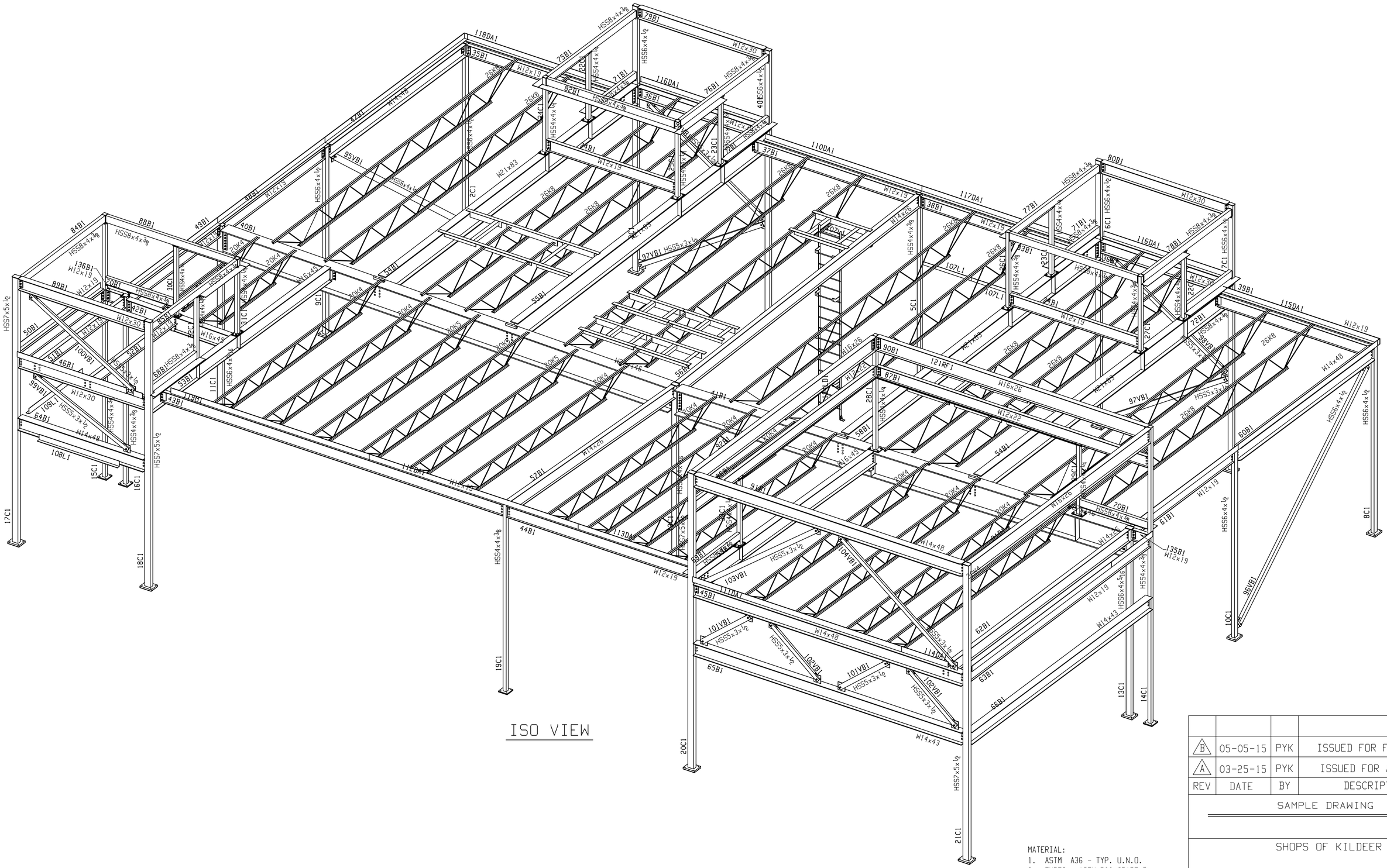

ISO VIEW

MATERIAL:
1. ASTM A36 - TYP. U.N.O.
2. TUBES - ASTM 500 GRADE B
3. WIDE FLANGE BEAMS - ASTM A992
4. WELD ELECTRODES - E70XX

FINISH: ONE COAT SHOP PRIMER

FIELD BOLTS: 3/4 DIA A325 U.N.O

OPEN HOLES: 13/16 DIA U.N.O

REV	DATE	BY	DESCRIPTION
B	05-05-15	PYK	ISSUED FOR FIELD USE
A	03-25-15	PYK	ISSUED FOR APPROVAL

SAMPLE DRAWING

SHOPS OF KILDEER

ARCHITECT:		GEN. CONTR:	
DATE:	SCALE:	DRAWN BY:	CHECKED BY:
TITLE: ISO VIEW			
SHEET NO.ISO		JOB NO.	

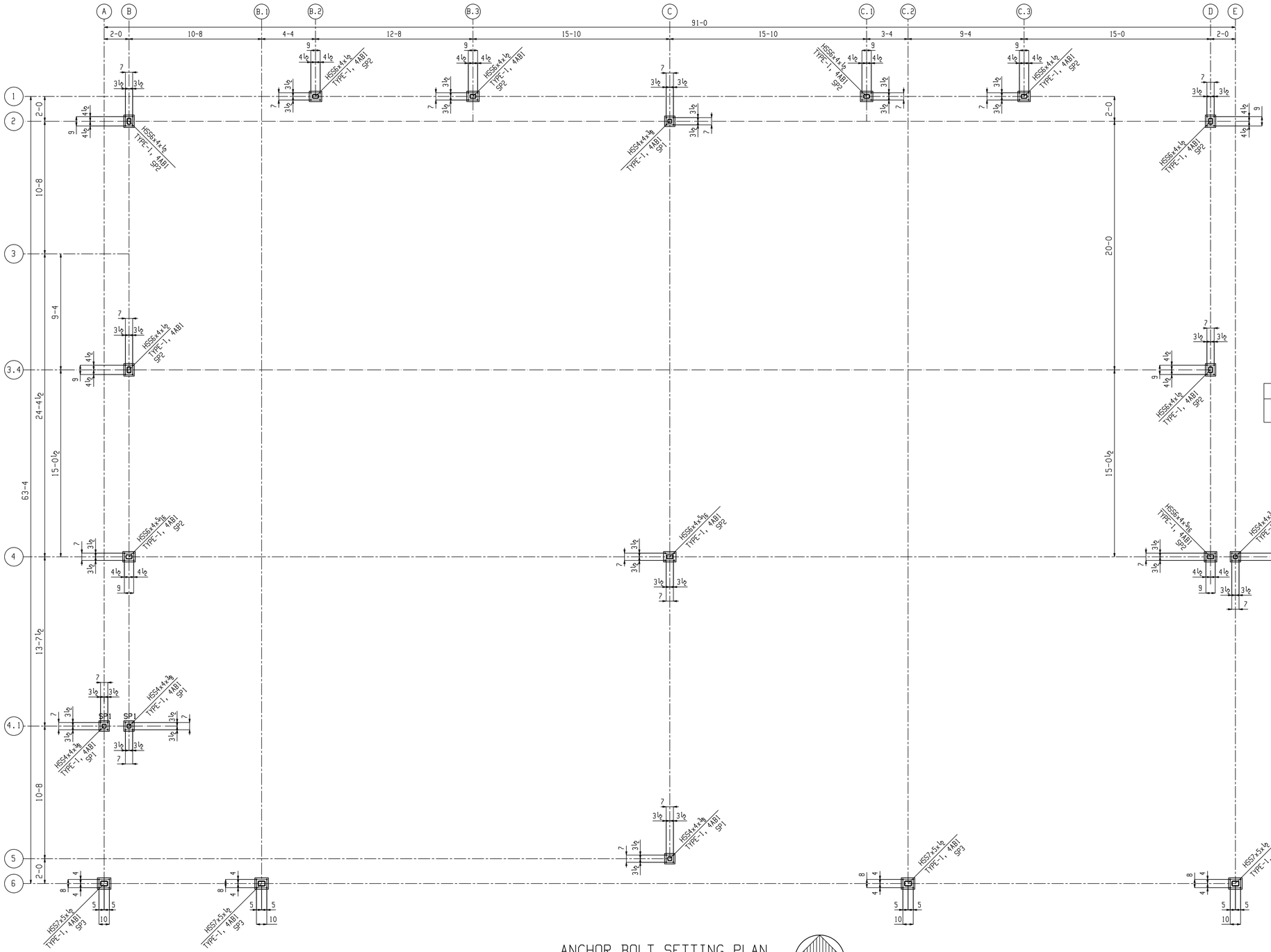

ANCHOR BOLT SETTING PLAN

TOP OF LEVELING PLATE EL: -0-6 (U.N.O)

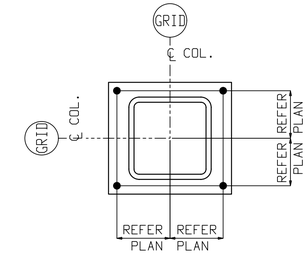

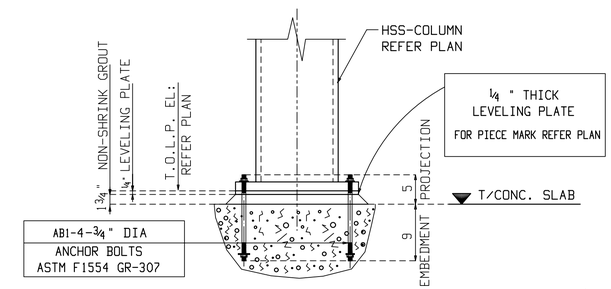

TYPICAL ANCHOR BOLT SETTING DETAIL

TYPE-1

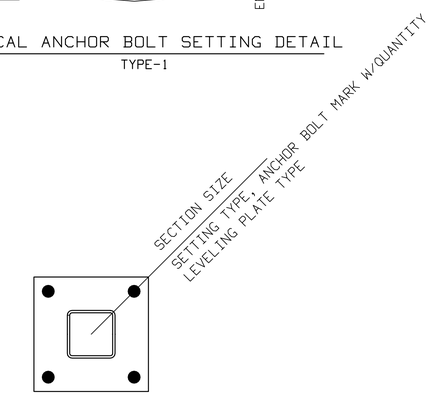

LEGEND

MATERIAL:
1. ASTM A36 - TYP. U.N.O.
2. TUBES - ASTM 500 GRADE B
3. WIDE FLANGE BEAMS - ASTM A992
4. WELD ELECTRODES - E70XX

FINISH: ONE COAT SHOP PRIMER

FIELD BOLTS: ¾ DIA A325 U.N.O

OPEN HOLES: 13/16 DIA U.N.O

REV	DATE	BY	DESCRIPTION
B	05-05-15	PYK	ISSUED FOR FIELD USE
A	03-25-15	PYK	ISSUED FOR APPROVAL

SAMPLE DRAWING

SHOPS OF KILDEER

ARCHITECT:		GEN. CONTR:	
DATE: 03-24-2015	SCALE:	DRAWN BY:	CHECKED BY:
TITLE: ANCHOR BOLT SETTING PLAN			
SHEET NO. AB1		JOB NO.	

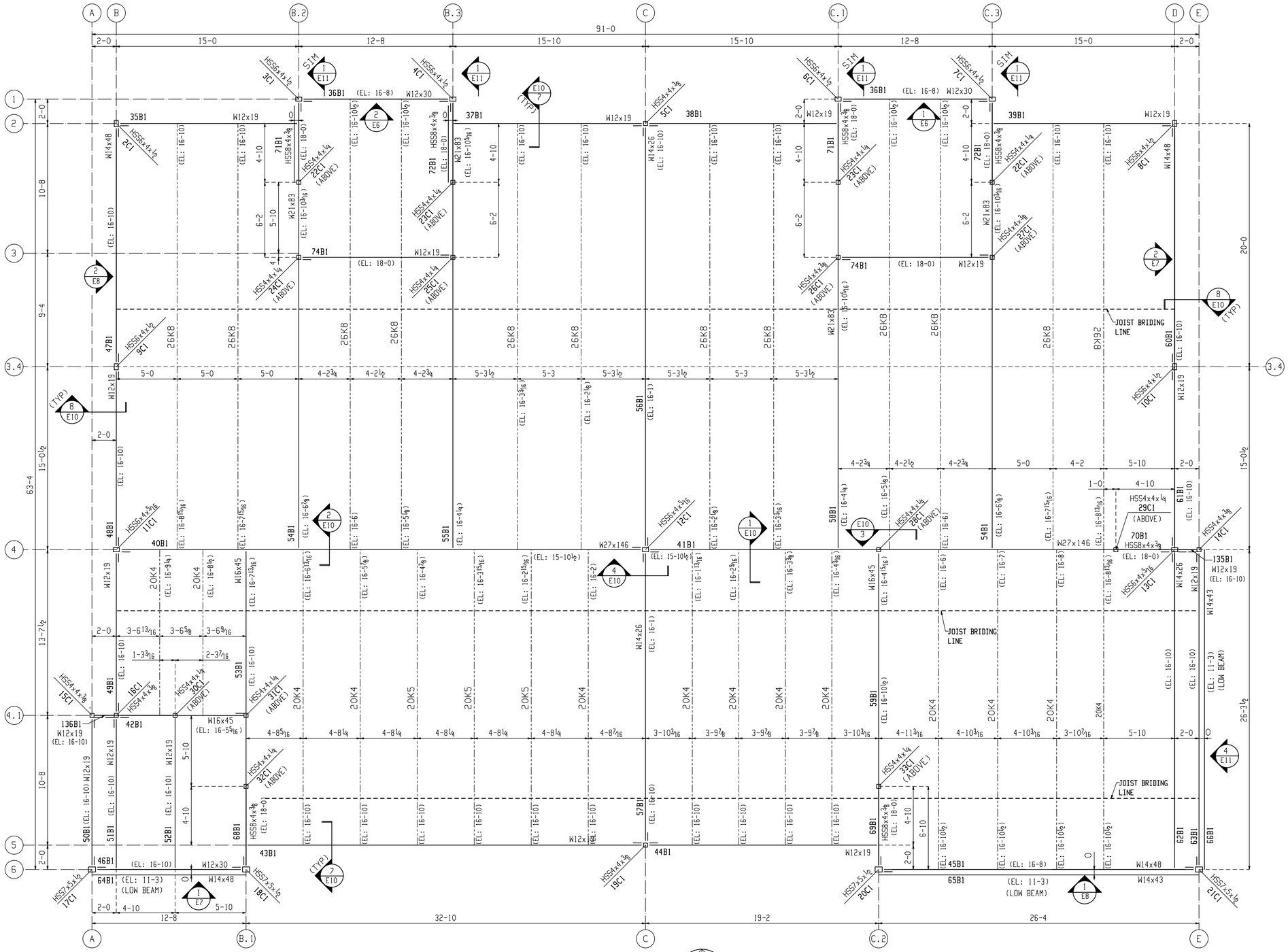

ROOF FRAMING PLAN

TOP OF STEEL EL: 16-7½ (U.N.O)

MATERIAL:
1. ASTM A36 - TYP. U.N.O.
2. TUBES - ASTM 500 GRADE B
3. WIDE FLANGE BEAMS - ASTM A992
4. WELD ELECTRODES - E70XX

FINISH: ONE COAT SHOP PRIMER

FIELD BOLTS: ¾ DIA A325 U.N.O

OPEN HOLES: 13/16 DIA U.N.O

REV	DATE	BY	DESCRIPTION
B	05-05-15	PYK	ISSUED FOR FIELD USE
A	03-25-15	PYK	ISSUED FOR APPROVAL

SAMPLE DRAWING

SHOPS OF KILDEER

ARCHITECT:		GEN. CONTR:	
DATE:	SCALE:	DRAWN BY:	CHECKED BY:
TITLE: ROOF FRAMING PLAN			
SHEET NO. E1		JOB NO.	

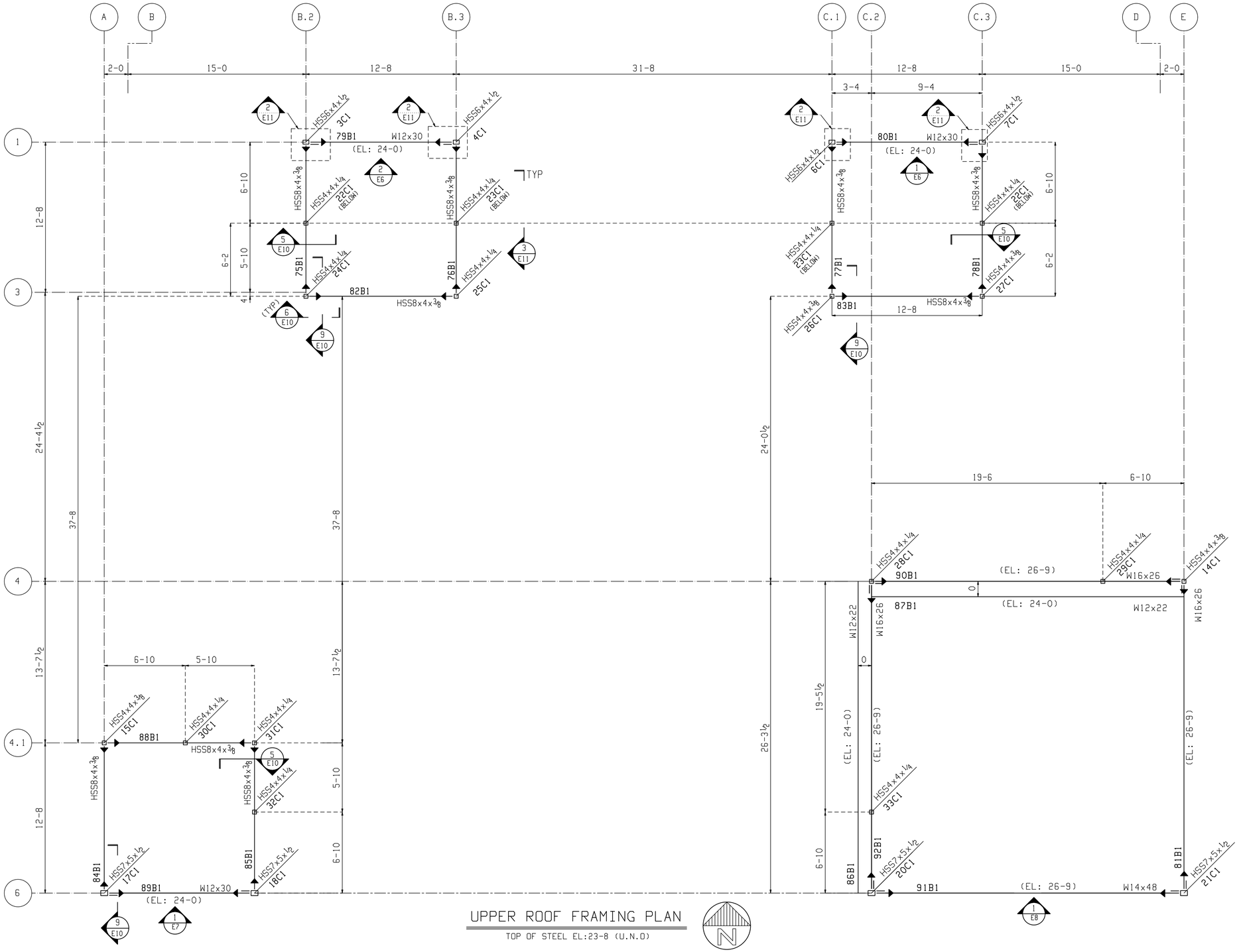

UPPER ROOF FRAMING PLAN

TOP OF STEEL EL:23-8 (U.N.O)

MATERIAL:
1. ASTM A36 - TYP. U.N.O.
2. TUBES - ASTM 500 GRADE B
3. WIDE FLANGE BEAMS - ASTM A992
4. WELD ELECTRODES - E70XX

FINISH: ONE COAT SHOP PRIMER

FIELD BOLTS: 3/4 DIA A325 U.N.O

OPEN HOLES: 13/16 DIA U.N.O

REV	DATE	BY	DESCRIPTION
B	05-05-15	PYK	ISSUED FOR FIELD USE
A	03-25-15	PYK	ISSUED FOR APPROVAL

SAMPLE DRAWING

SHOPS OF KILDEER

ARCHITECT: | GEN. CONTR:

DATE: | SCALE: | DRAWN BY: | CHECKED BY:

TITLE: UPPER ROOF FRAMING PLAN

SHEET NO. E2 | JOB NO.

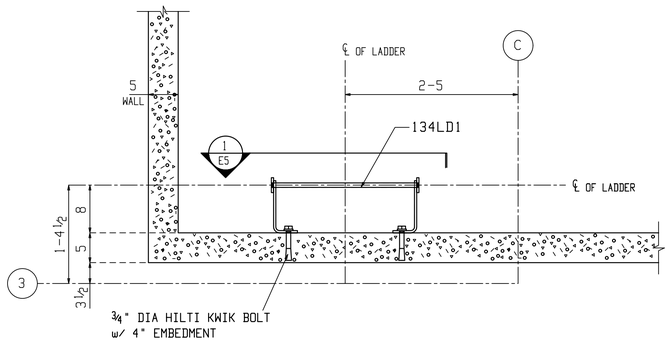

LADDER PLAN

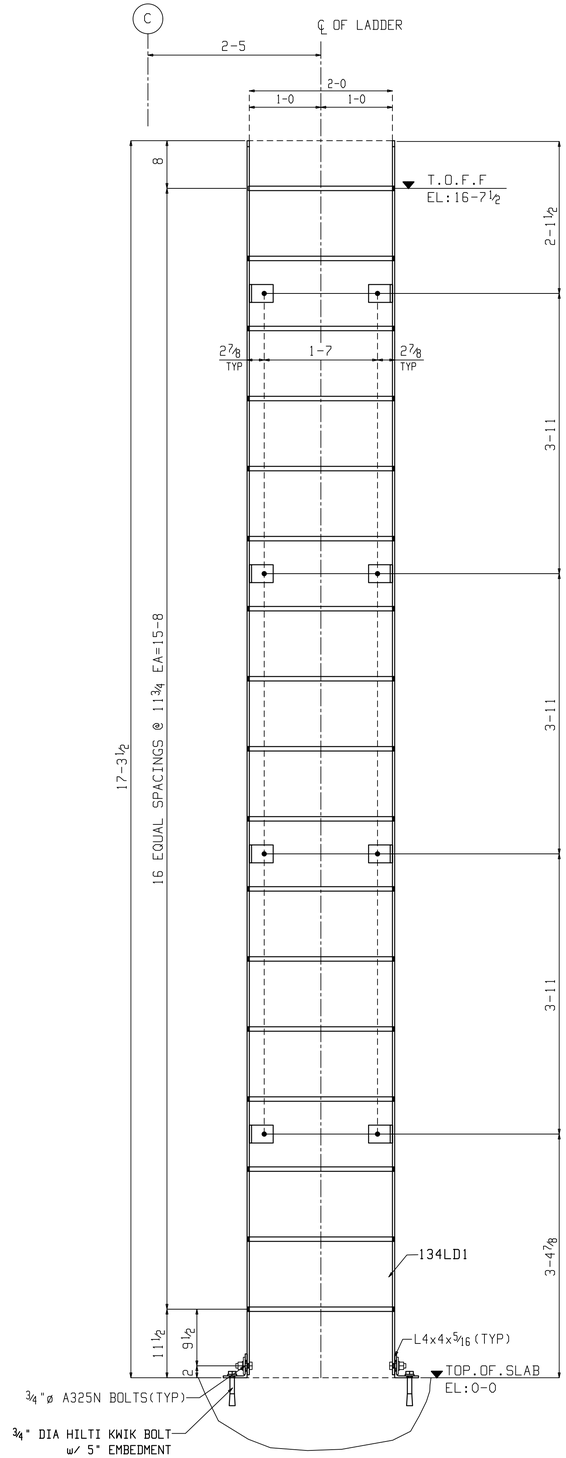

1
E5
SECTION VIEW

MATERIAL:
1. ASTM A36 - TYP. U.N.O.
2. TUBES - ASTM 500 GRADE B
3. WIDE FLANGE BEAMS - ASTM A992
4. WELD ELECTRODES - E70XX

FINISH: ONE COAT SHOP PRIMER

FIELD BOLTS: 3/4 DIA A325 U.N.O

OPEN HOLES: 13/16 DIA U.N.O

REV	DATE	BY	DESCRIPTION
B	05-05-15	PYK	ISSUED FOR FIELD USE
A	03-25-15	PYK	ISSUED FOR APPROVAL

SAMPLE DRAWING

SHOPS OF KILDEER

ARCHITECT: ETHOS WORKSHOP | GEN. CONTR:

DATE: | SCALE: | DRAWN BY: | CHECKED BY:

TITLE: LADDER PLAN & SECTION VIEWS

SHEET NO.E5 | JOB NO.

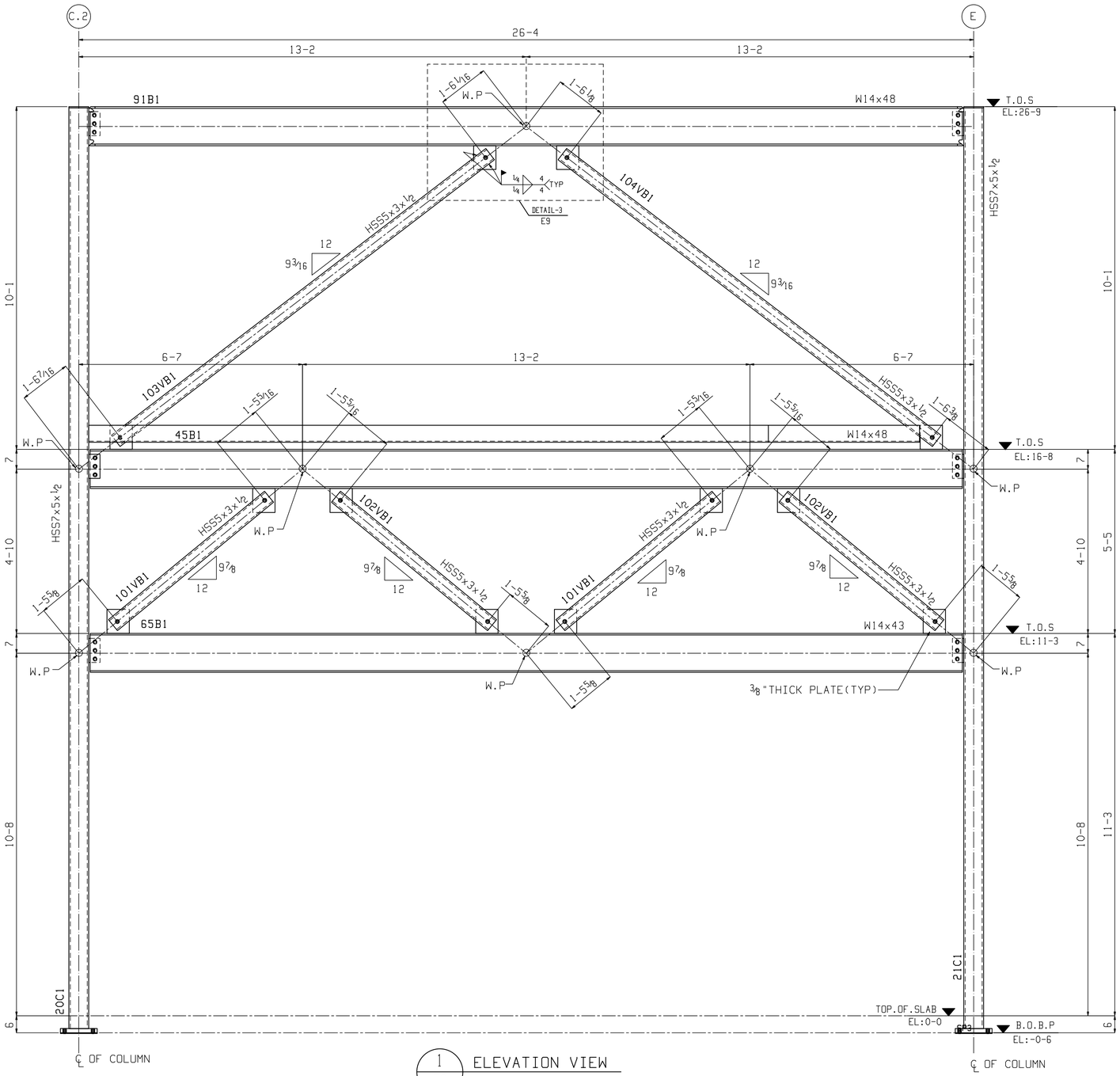

1 / E8 ELEVATION VIEW

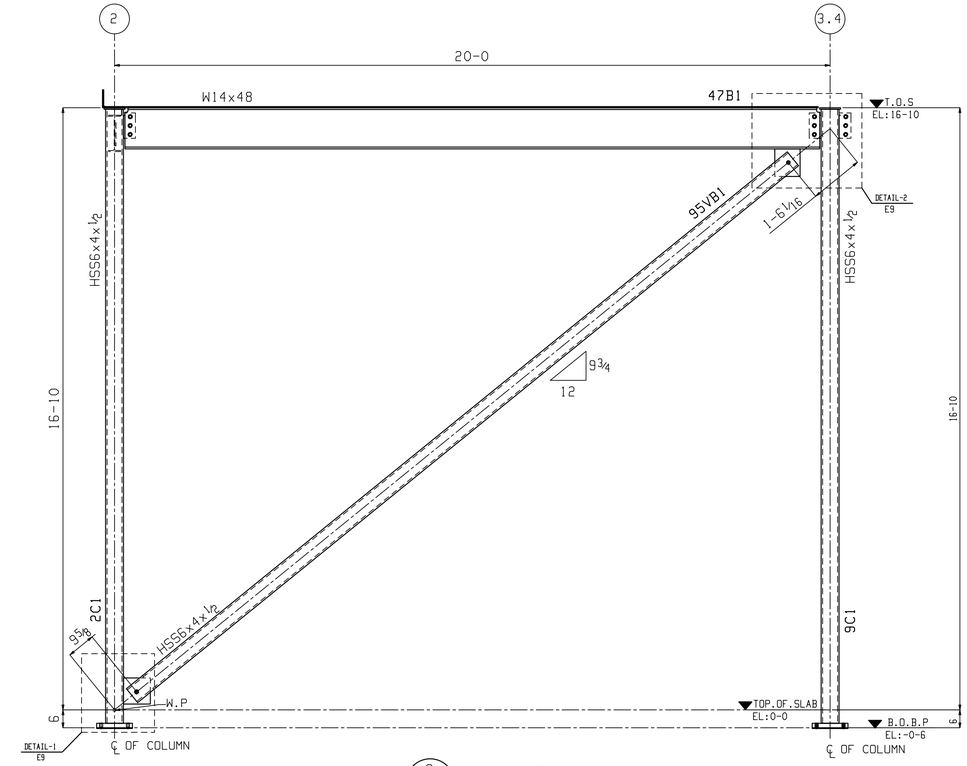

2 / E8 ELEVATION VIEW

MATERIAL:
1. ASTM A36 - TYP. U.N.O.
2. TUBES - ASTM 500 GRADE B
3. WIDE FLANGE BEAMS - ASTM A992
4. WELD ELECTRODES - E70XX

FINISH: ONE COAT SHOP PRIMER

FIELD BOLTS: 3/4 DIA A325 U.N.O

OPEN HOLES: 13/16 DIA U.N.O

REV	DATE	BY	DESCRIPTION
B	05-05-15	PYK	ISSUED FOR FIELD USE
A	03-25-15	PYK	ISSUED FOR APPROVAL

SAMPLE DRAWING

SHOPS OF KILDEER

ARCHITECT:		GEN. CONTR:	
DATE:	SCALE:	DRAWN BY:	CHECKED BY:
TITLE: ELEVATION VIEWS			
SHEET NO. E8		JOB NO.	

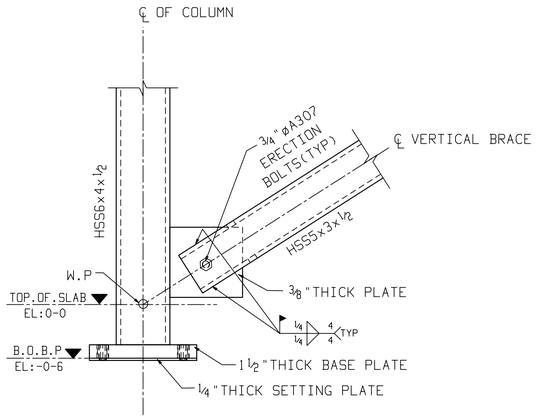

DETAIL-1
6/S2.2

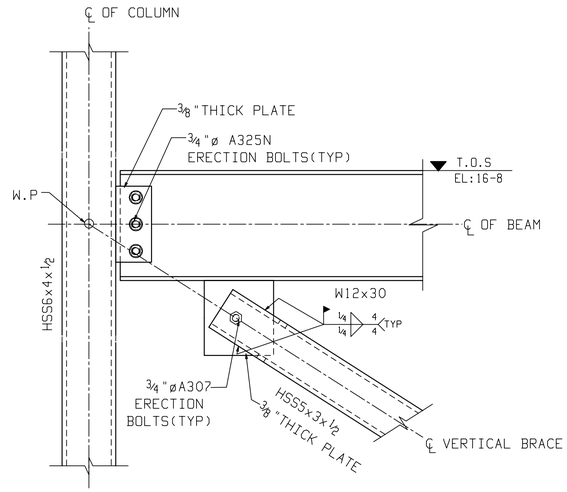

DETAIL-2
7/S2.2

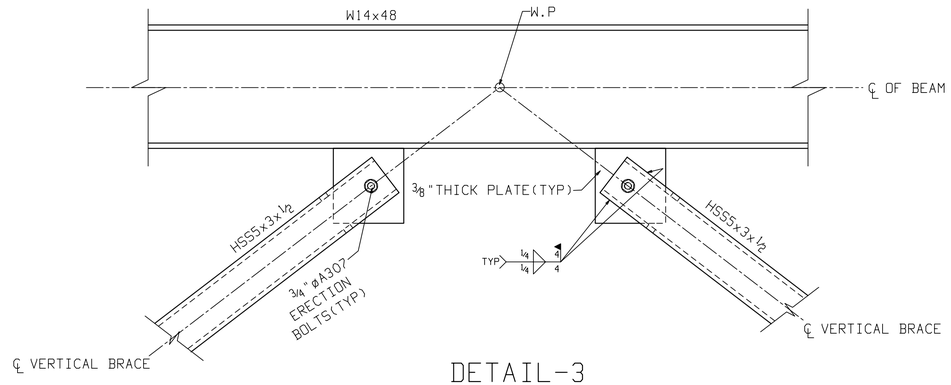

DETAIL-3
8/S2.2

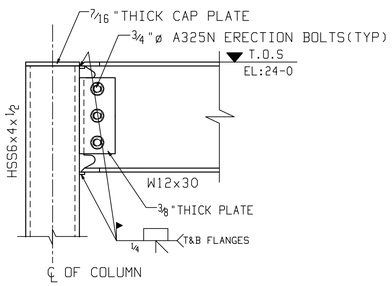

DETAIL-4
9/S2.2

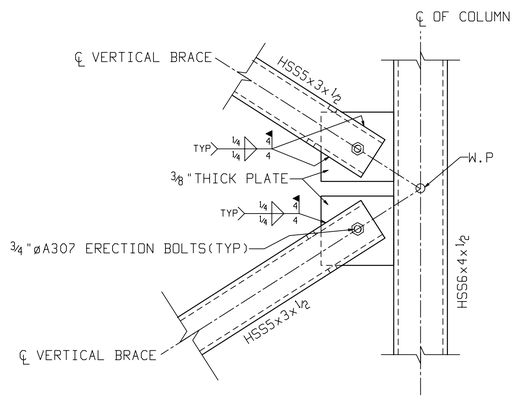

DETAIL-5
10/S2.2

REV	DATE	BY	DESCRIPTION
B	05-05-15	PYK	ISSUED FOR FIELD USE
A	03-25-15	PYK	ISSUED FOR APPROVAL

SAMPLE DRAWING

SHOPS OF KILDEER

MATERIAL:
1. ASTM A36 - TYP. U.N.O.
2. TUBES - ASTM 500 GRADE B
3. WIDE FLANGE BEAMS - ASTM A992
4. WELD ELECTRODES - E70XX

FINISH: ONE COAT SHOP PRIMER

FIELD BOLTS: 3/4 DIA A325 U.N.O

OPEN HOLES: 13/16 DIA U.N.O

ARCHITECT:		GEN. CONTR:	
DATE:	SCALE:	DRAWN BY:	CHECKED BY:
TITLE: TYPICAL DETAILS			
SHEET NO. E9		JOB NO.	

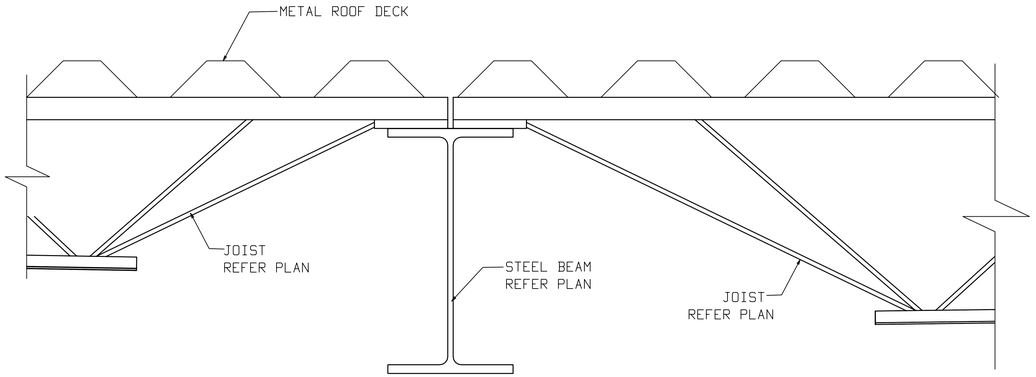

1 / E10 SECTION VIEW
REFER:1/S2.1

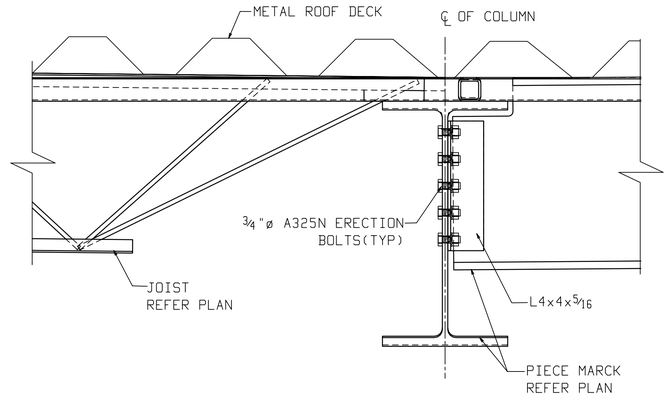

2 / E10 SECTION VIEW
REFER:3/S2.1

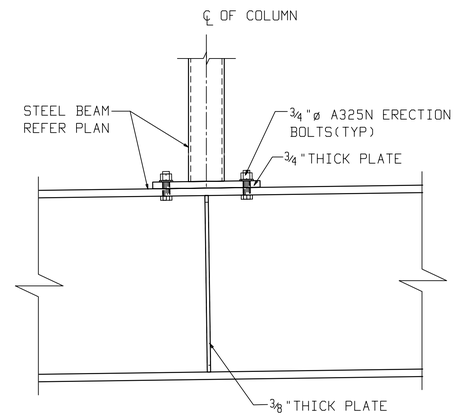

3 / E10 SECTION VIEW
REFER:4/S2.1

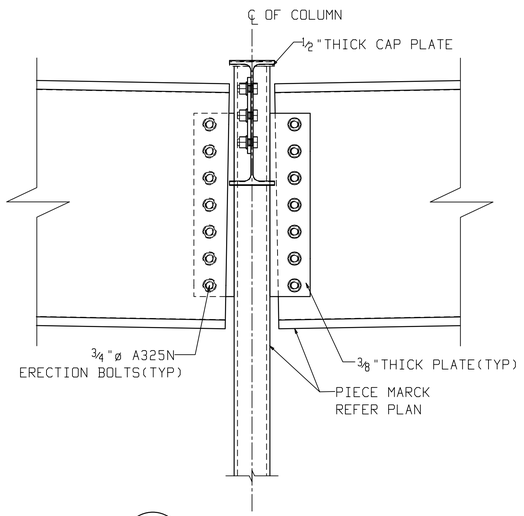

4 / E10 SECTION VIEW
REFER:6/S2.1

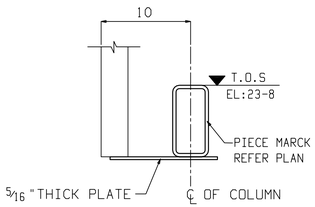

5 / E10 SECTION VIEW
REFER:8/S2.1

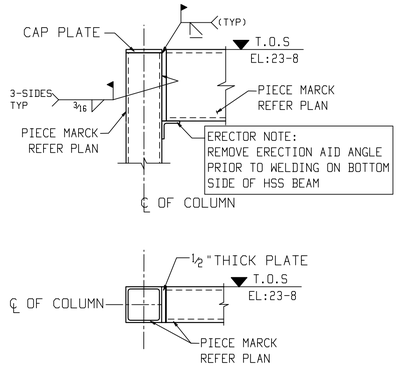

6 / E10 SECTION VIEW
REFER:9/S2.1

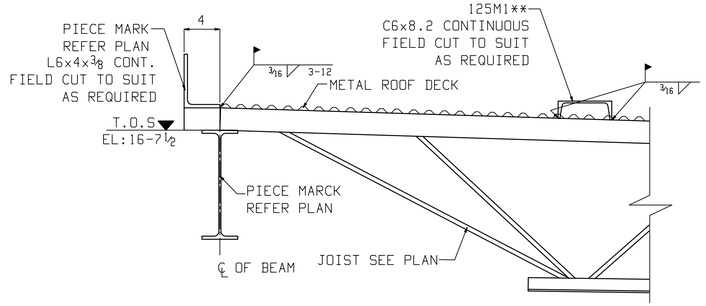

7 / E10 SECTION VIEW
REFER:11/S2.1
**FIELD CUT TO SUIT

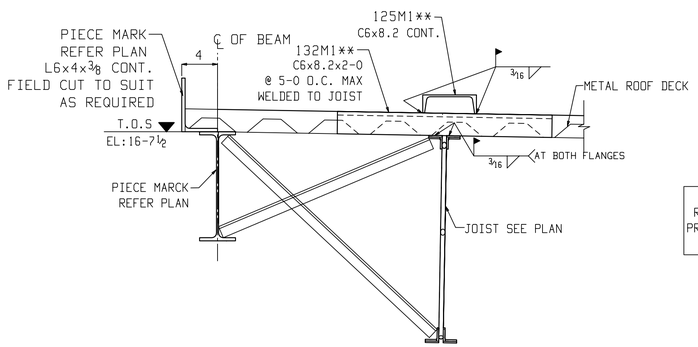

8 / E10 SECTION VIEW
REFER:12/S2.1
**FIELD CUT TO SUIT

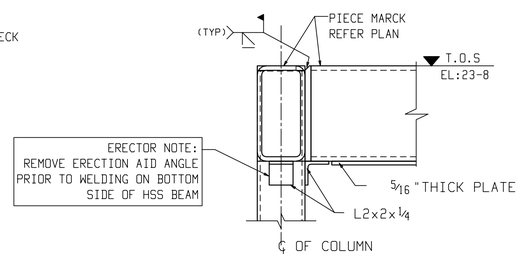

9 / E10 SECTION VIEW
REFER:9/S2.1

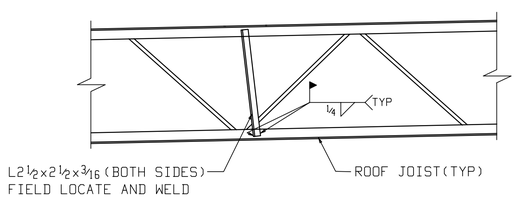

10 / E10 TYPICAL DETAIL AT TOWER
(REF SEC:5/S2.1)
** - INDICATES FIELD CUT TO SUIT

MATERIAL:
1. ASTM A36 - TYP. U.N.O.
2. TUBES - ASTM 500 GRADE B
3. WIDE FLANGE BEAMS - ASTM A992
4. WELD ELECTRODES - E70XX

FINISH: ONE COAT SHOP PRIMER
FIELD BOLTS: 3/4 DIA A325 U.N.O
OPEN HOLES: 13/16 DIA U.N.O

REV	DATE	BY	DESCRIPTION
B	05-05-15	PYK	ISSUED FOR FIELD USE
A	03-25-15	PYK	ISSUED FOR APPROVAL

SAMPLE DRAWING

SHOPS OF KILDEER

ARCHITECT:
GEN. CONTR:
DATE:
SCALE:
DRAWN BY:
CHECKED BY:
TITLE: SECTION VIEWS
SHEET NO. E10
JOB NO.

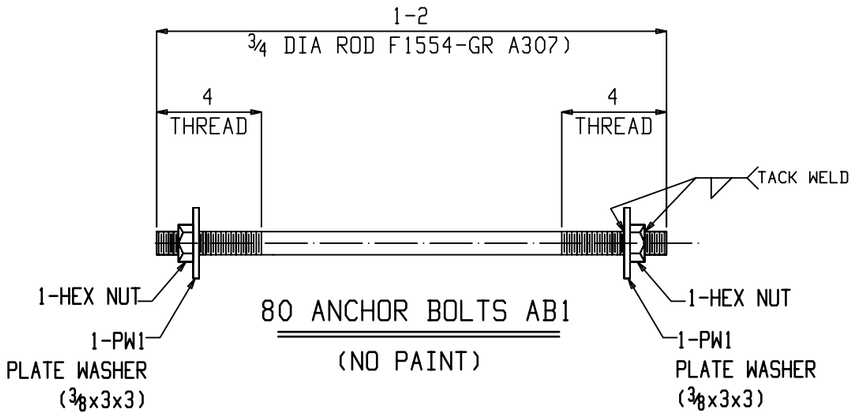

80 ANCHOR BOLTS AB1

(NO PAINT)

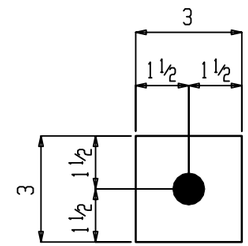

DETAIL OF PW1

PL 3/8x3x3

(NO PAINT)

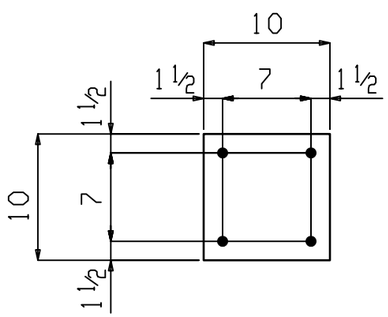

5 SETTING PLATES SP1

(NO PAINT)

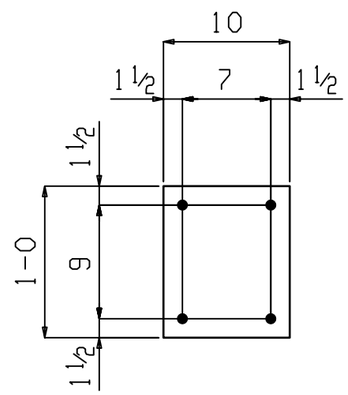

11 SETTING PLATES SP2

(NO PAINT)

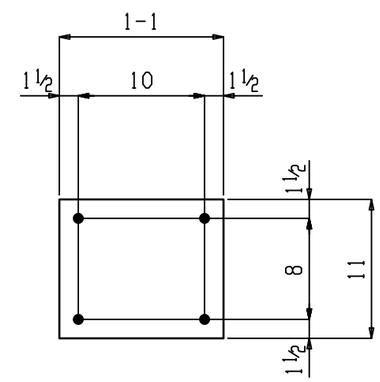

4 SETTING PLATES SP3

(NO PAINT)

BILL OF MATERIAL

QTY TOTAL	PC MARK	DESCRIPTION	LENGTH		REMARKS	STEEL GRADE
80	1AB1	ANCHOR BOLT				
80	1AB1	3/4" DIA ANCHOR ROD	1	2	F1554 A307	
160	PW1	PL3/8x3	0	3		A36
160		3/4" DIA HEX NUT			A563	
5	SP1	SETTING PLATE				
5	SP1	PL1/4x10	0	10		A36
11	SP2	SETTING PLATE				
11	SP2	PL1/4x10	1	0		A36
4	SP3	SETTING PLATE				
4	SP3	PL1/4x11	1	1		A36

REV	DATE	BY	DESCRIPTION
B	04-30-15	TAP	ISSUED FOR FABRICATION
A	03-17-15	TAP	ISSUED FOR APPROVAL

SAMPLE DRAWING

SHOPS OF KILDEER

MATERIAL:
1. ASTM A36 - TYP. U.N.O.
2. TUBES - ASTM 500 GRADE B
3. WIDE FLANGE BEAMS - ASTM A992
4. WELD ELECTRODES - E70XX

FINISH: ONE COAT SHOP PRIMER

SHOP BOLTS: 3/4 DIA A325 U.N.O

OPEN HOLES: 13/16 DIA U.N.O

ARCHITECT:		GEN. CONTR:	
DATE:	SCALE:	DRAWN BY:	CHECKED BY:
TITLE: COLUMN DETAIL			
SHEET NO. ONE		JOB NO.	

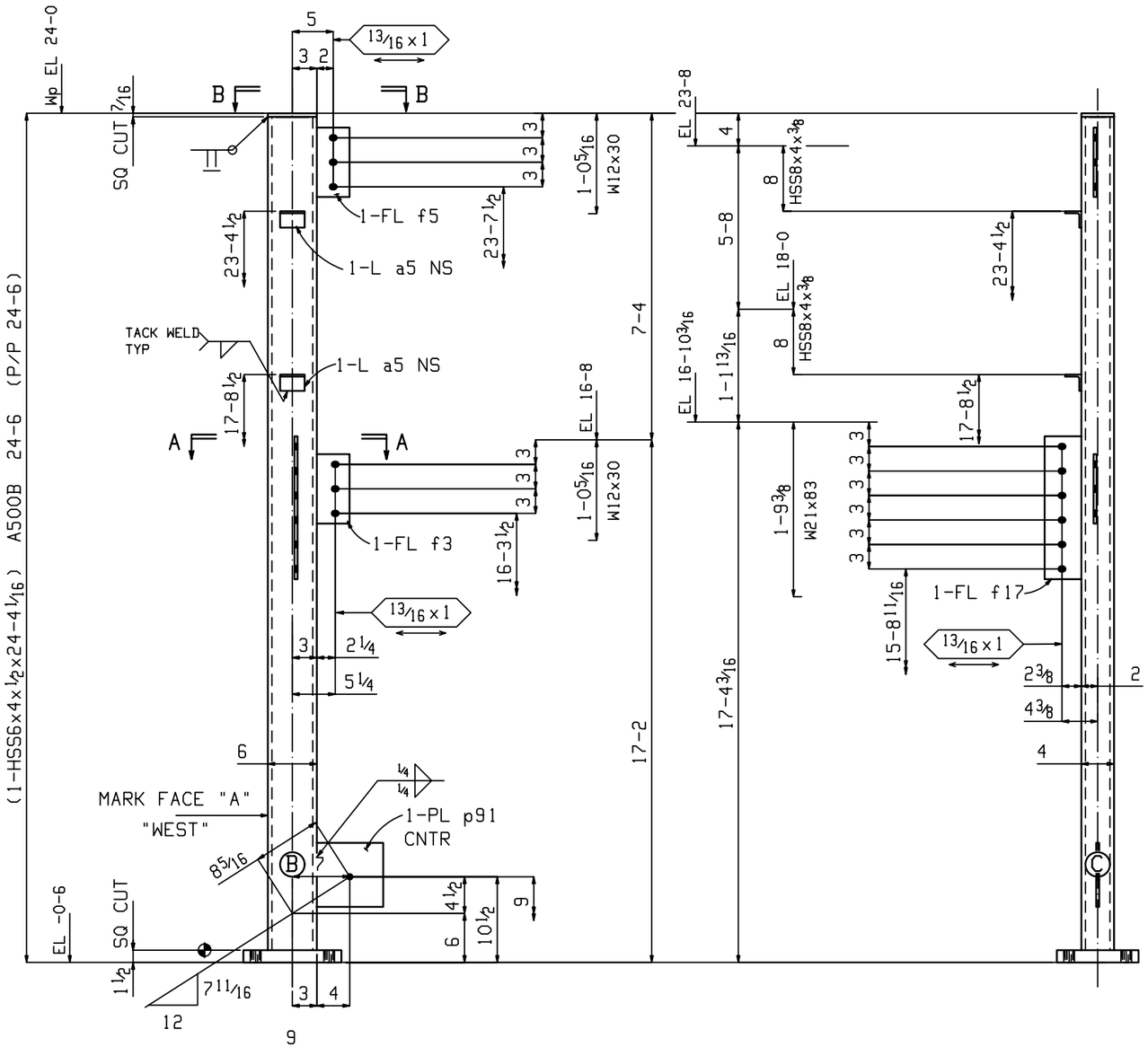

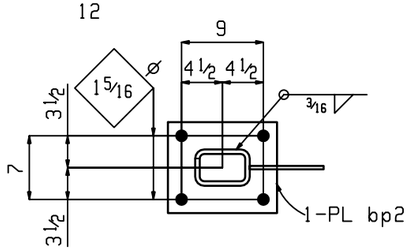

ONE COLUMN 3C1

AT GRID:
1 & B.2

FIELD BOLTS:
1-3/4x4 1/4 A307

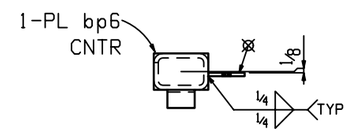

Section B-B
3C1

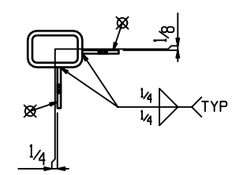

Section A-A
3C1

BILL OF MATERIAL

QTY TOTAL	PC MARK	DESCRIPTION	LENGTH		REMARKS	STEEL GRADE
ONE	3C1	COLUMN				
1	3C1	HSS6x4x1/2	24	4 1/16	S2E	A500B
2	a5	L2x2x1/4	0	3		A36
1	bp2	PL1 1/2x10	1	0		A36
1	bp6	PL7/16x4	0	6		A36
1	p91	PL3/8x7 13/16	0	8 1/8		A36
1	f17	FL3/8x4 1/2	1	5 1/2		A36
1	f3	FL3/8x4	0	8 1/2		A36
1	f5	FL3/8x4	0	8 1/2		A36
		FIELD BOLTS				
1		3/4 Dia A307	0	4 1/4	+1HD WASH	

MATERIAL:
1. ASTM A36 - TYP. U.N.O.
2. TUBES - ASTM 500 GRADE B
3. WIDE FLANGE BEAMS - ASTM A992
4. WELD ELECTRODES - E70XX

FINISH: ONE COAT SHOP PRIMER

SHOP BOLTS: 3/4 DIA A325 U.N.O

OPEN HOLES: 13/16 DIA U.N.O

REV	DATE	BY	DESCRIPTION
B	04-30-15	TAP	ISSUED FOR FABRICATION
A	03-17-15	TAP	ISSUED FOR APPROVAL

SAMPLE DRAWING

SHOPS OF KILDEER

ARCHITECT:
GEN. CONTR:
DATE:
SCALE:
DRAWN BY:
CHECKED BY:
TITLE: COLUMN DETAIL
SHEET NO. 3
JOB NO.

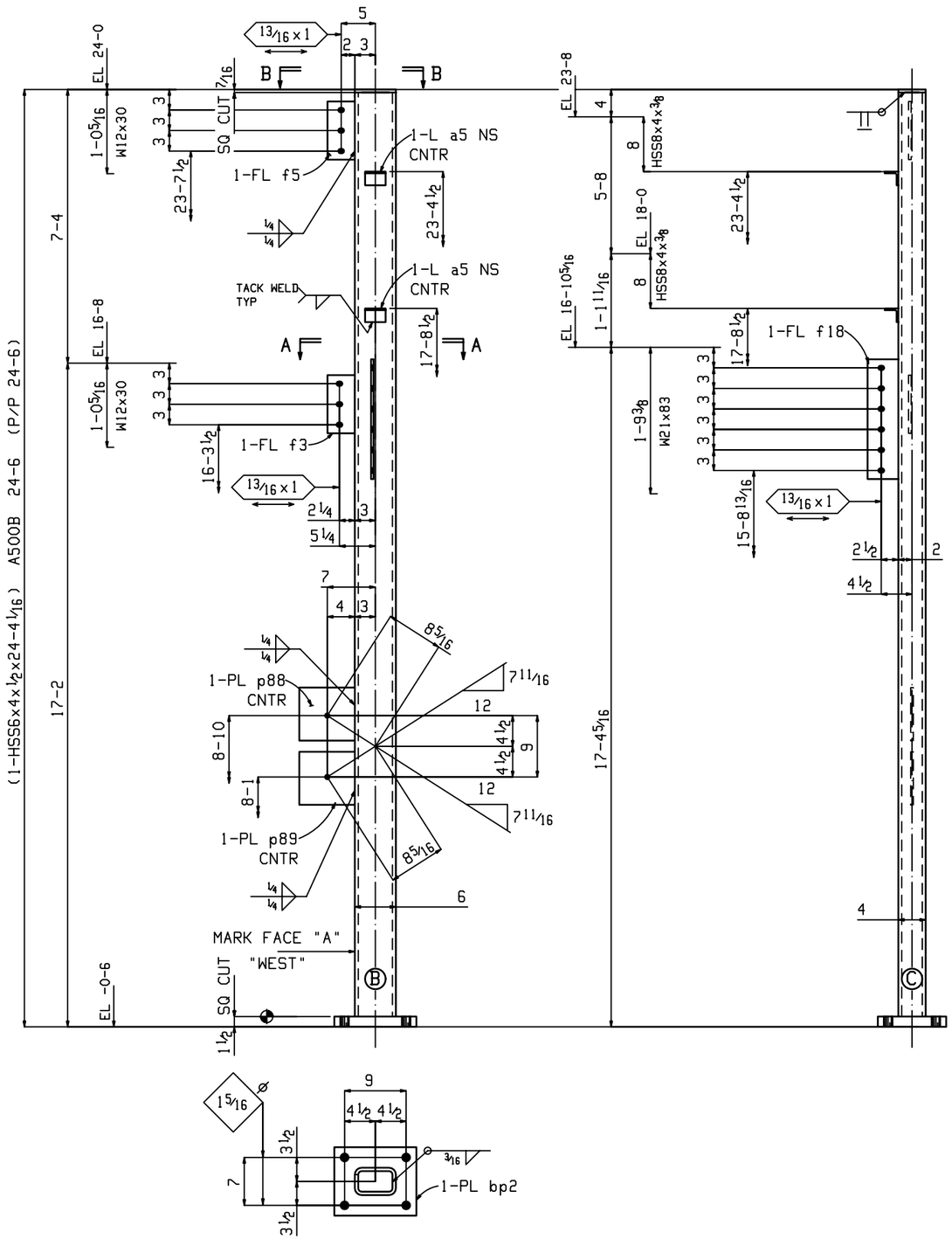

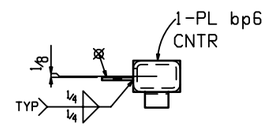

Section B-B
4C1

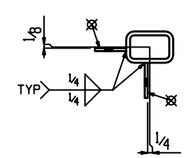

Section A-A
4C1

ONE COLUMN 4C1

AT GRID:
1 & B.3

FIELD BOLTS:
2-3/4x4 1/4 A307

BILL OF MATERIAL

QTY TOTAL	PC MARK	DESCRIPTION	LENGTH		REMARKS	STEEL GRADE
ONE	4C1	COLUMN				
1	4C1	HSS6x4x1/2	24	4 1/16	S2E	A500B
2	a5	L2x2x1/4	0	3		A36
1	bp2	PL1 1/2x10	1	0		A36
1	bp6	PL7/16x4	0	6		A36
1	p88	PL3/8x7 3/4	0	8 1/8		A36
1	p89	PL3/8x7 3/4	0	8 1/8		A36
1	f18	FL3/8x4 1/2	1	5 1/2		A36
1	f3	FL3/8x4	0	8 1/2		A36
1	f5	FL3/8x4	0	8 1/2		A36
		FIELD BOLTS				
2		3/4 Dia A307	0	4 1/4	+1HD WASH	

REV	DATE	BY	DESCRIPTION
B	04-30-15	TAP	ISSUED FOR FABRICATION
A	03-17-15	TAP	ISSUED FOR APPROVAL

MATERIAL:
1. ASTM A36 - TYP. U.N.O.
2. TUBES - ASTM 500 GRADE B
3. WIDE FLANGE BEAMS - ASTM A992
4. WELD ELECTRODES - E70XX

FINISH: ONE COAT SHOP PRIMER

SHOP BOLTS: 3/4 DIA A325 U.N.O

OPEN HOLES: 13/16 DIA U.N.O

SAMPLE DRAWING

SHOPS OF KILDEER

ARCHITECT:
GEN. CONTR:
DATE:
SCALE:
DRAWN BY:
CHECKED BY:
TITLE: COLUMN DETAIL
SHEET NO. 4
JOB NO.

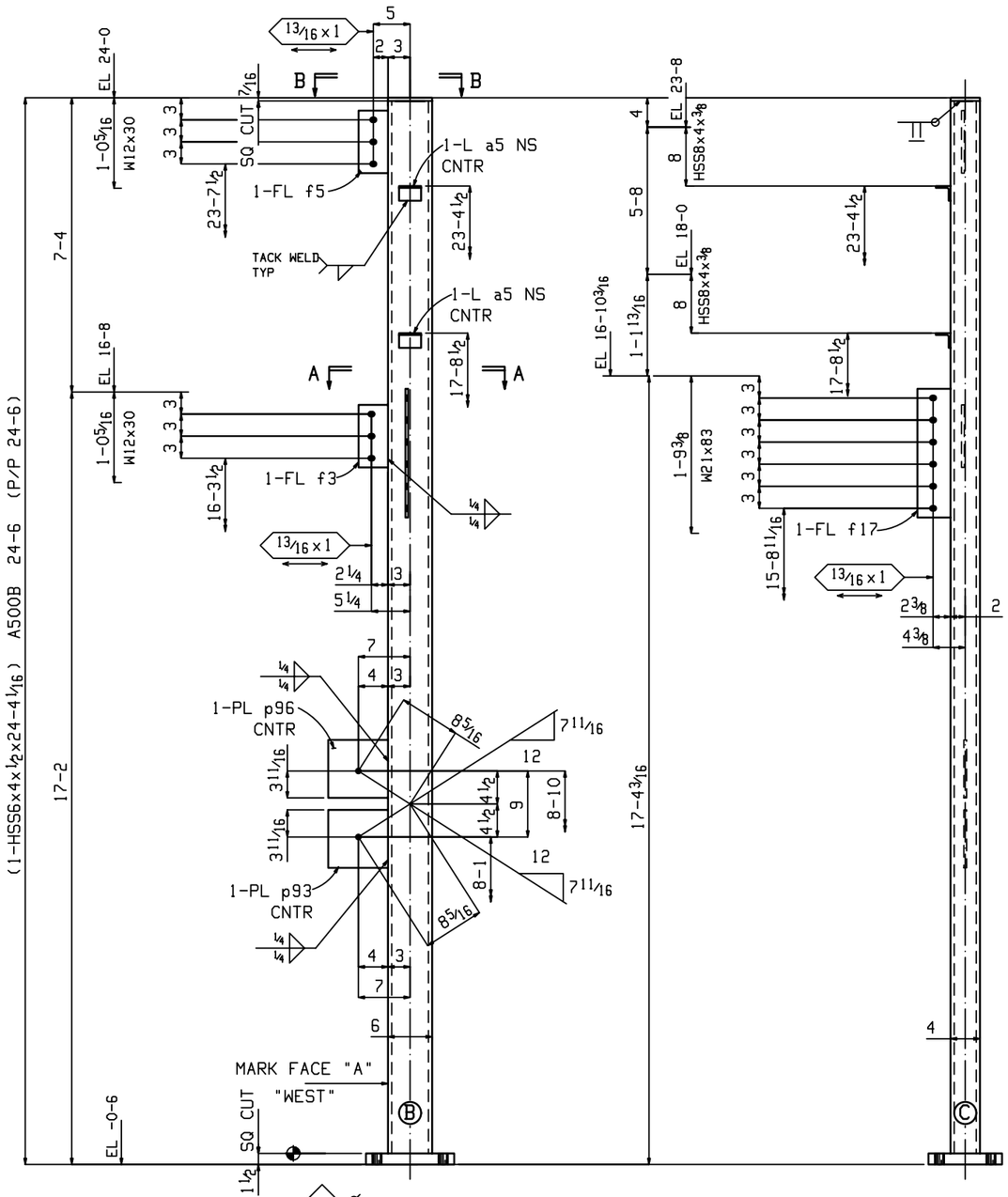

ONE COLUMN 7C1

AT GRID:
1 & C.3

BILL OF MATERIAL

QTY TOTAL	PC MARK	DESCRIPTION	LENGTH		REMARKS	STEEL GRADE
ONE	7C1	COLUMN				
1	7C1	HSS6x4x1/2	24	4 1/16	S2E	A500B
2	a5	L2x2x1/4	0	3		A36
1	bp2	PL1 1/2x10	1	0		A36
1	bp6	PL7/16x4	0	6		A36
1	p93	PL3/8x7 7/8	0	8 1/8		A36
1	p96	PL3/8x7 7/8	0	8 1/8		A36
1	f17	FL3/8x4 1/2	1	5 1/2		A36
1	f3	FL3/8x4	0	8 1/2		A36
1	f5	FL3/8x4	0	8 1/2		A36

MATERIAL:
1. ASTM A36 - TYP. U.N.O.
2. TUBES - ASTM 500 GRADE B
3. WIDE FLANGE BEAMS - ASTM A992
4. WELD ELECTRODES - E70XX

FINISH: ONE COAT SHOP PRIMER

SHOP BOLTS: 3/4 DIA A325 U.N.O

OPEN HOLES: 13/16 DIA U.N.O

REV	DATE	BY	DESCRIPTION
B	04-30-15	TAP	ISSUED FOR FABRICATION
A	03-17-15	TAP	ISSUED FOR APPROVAL

SAMPLE DRAWING

SHOPS OF KILDEER

ARCHITECT: | GEN. CONTR:

DATE: | SCALE: | DRAWN BY: | CHECKED BY:

TITLE: COLUMN DETAIL

SHEET NO. 7 | JOB NO.

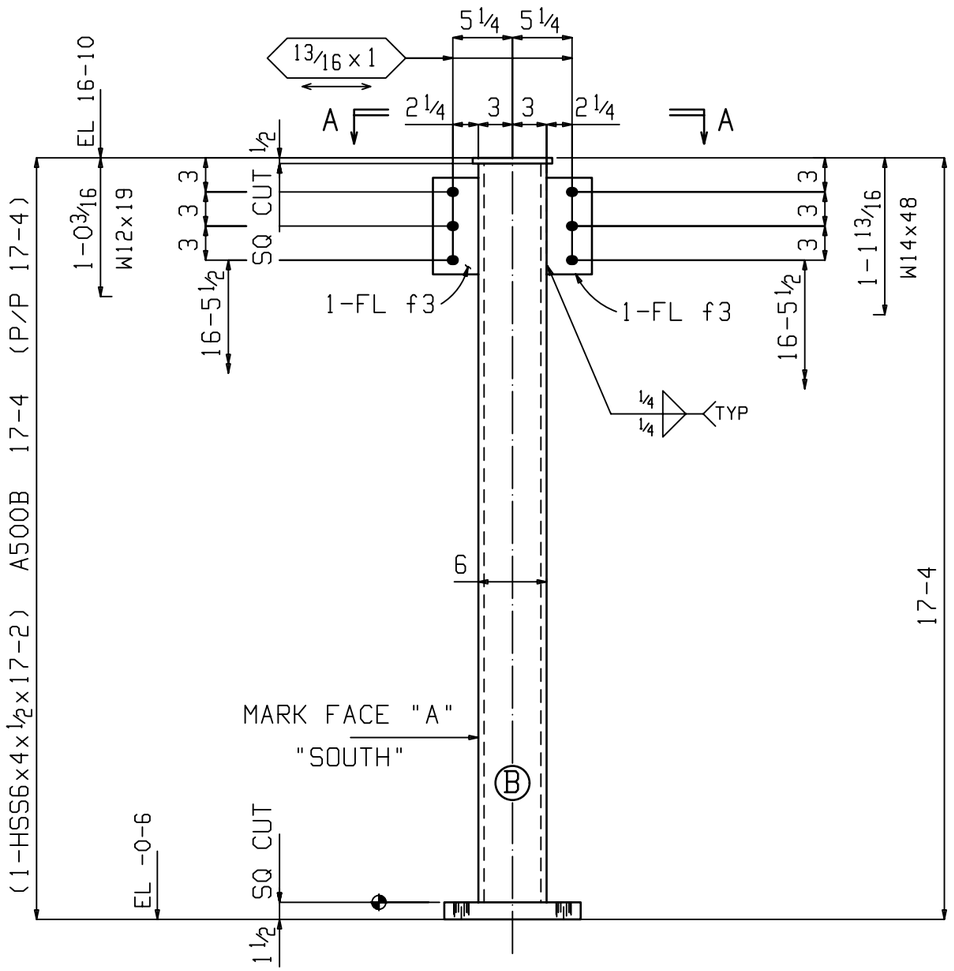

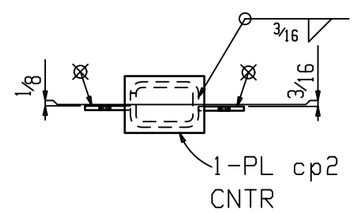

Section A-A
9C1

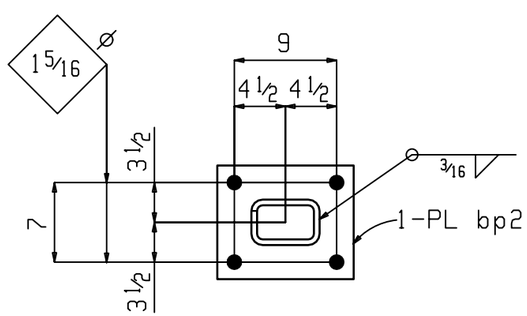

ONE COLUMN 9C1

AT GRID:
3.4 & B

BILL OF MATERIAL

QTY TOTAL	PC MARK	DESCRIPTION	LENGTH		REMARKS	STEEL GRADE
ONE	9C1	COLUMN				
1	9C1	HSS6x4x1/2	17	2	S2E	A500B
1	bp2	PL1 1/2x10	1	0		A36
1	cp2	PL1/2x5	0	7		A36
2	f3	FL3/8x4	0	8 1/2		A36

MATERIAL:
1. ASTM A36 - TYP. U.N.O.
2. TUBES - ASTM 500 GRADE B
3. WIDE FLANGE BEAMS - ASTM A992
4. WELD ELECTRODES - E70XX

FINISH: ONE COAT SHOP PRIMER

SHOP BOLTS: 3/4 DIA A325 U.N.O

OPEN HOLES: 13/16 DIA U.N.O

REV	DATE	BY	DESCRIPTION
B	04-30-15	TAP	ISSUED FOR FABRICATION
A	03-17-15	TAP	ISSUED FOR APPROVAL

SAMPLE DRAWING

SHOPS OF KILDEER

ARCHITECT: | GEN. CONTR:

DATE: | SCALE: | DRAWN BY: | CHECKED BY:

TITLE: COLUMN DETAIL

SHEET NO. 9 | JOB NO.

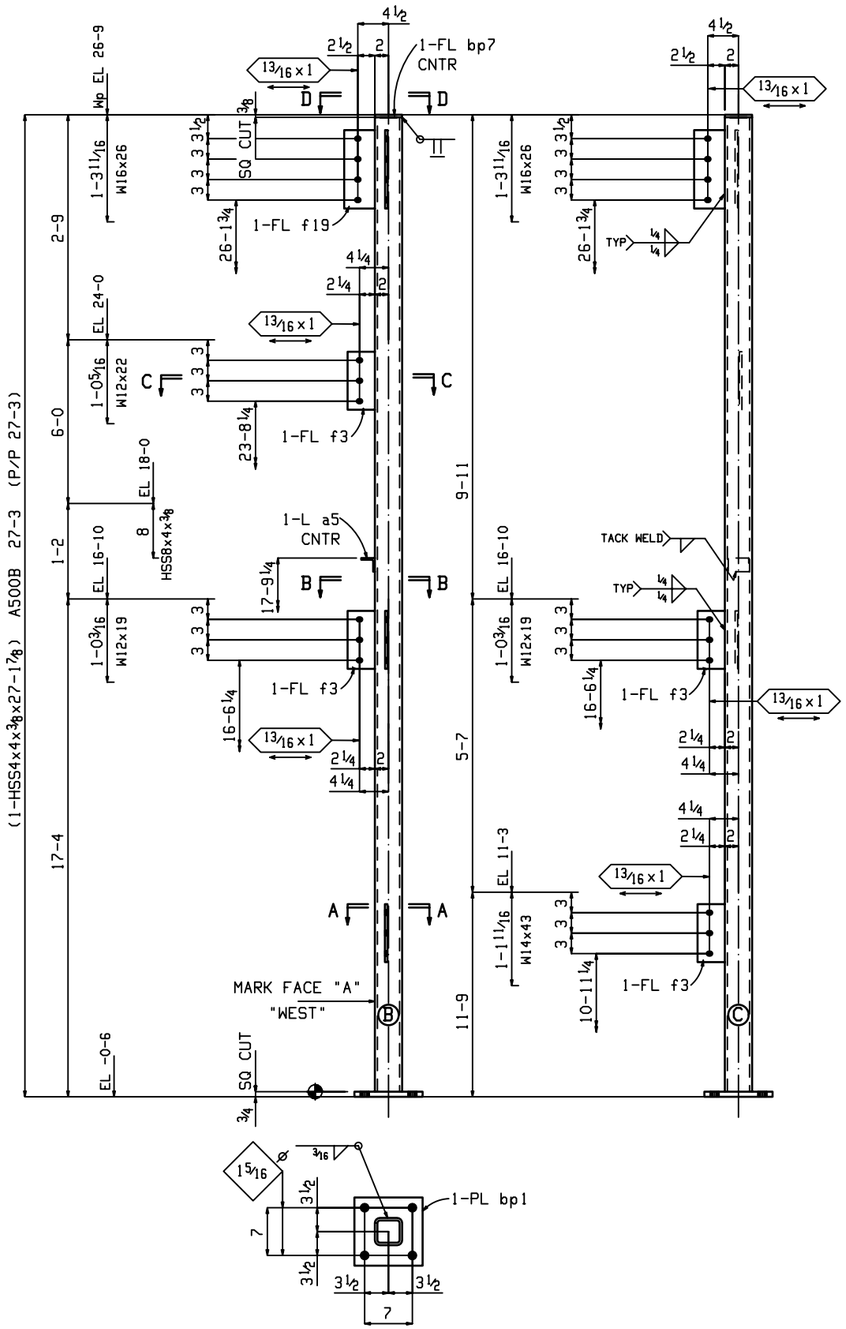

ONE COLUMN 14C1

AT GRID:
4 & E

BILL OF MATERIAL

QTY TOTAL	PC MARK	DESCRIPTION	LENGTH		REMARKS	STEEL GRADE
ONE	14C1	COLUMN				
1	14C1	HSS4x4x3/8	27	1 7/8	S2E	A500B
1	a5	L2x2x1/4	0	3		A36
1	bp1	PL3/4x10	0	10		A36
2	f19	FL3/8x4 1/2	0	11 1/2		A36
4	f3	FL3/8x4	0	8 1/2		A36
1	bp7	FL3/8x4	0	4		A36

MATERIAL:
1. ASTM A36 - TYP. U.N.O.
2. TUBES - ASTM 500 GRADE B
3. WIDE FLANGE BEAMS - ASTM A992
4. WELD ELECTRODES - E70XX

FINISH: ONE COAT SHOP PRIMER

SHOP BOLTS: 3/4 DIA A325 U.N.O

OPEN HOLES: 13/16 DIA U.N.O

REV	DATE	BY	DESCRIPTION
B	04-30-15	TAP	ISSUED FOR FABRICATION
A	03-17-15	TAP	ISSUED FOR APPROVAL

SAMPLE DRAWING

SHOPS OF KILDEER

ARCHITECT: | GEN. CONTR:

DATE: | SCALE: | DRAWN BY: | CHECKED BY:

TITLE: COLUMN DETAIL

SHEET NO. 14 | JOB NO.

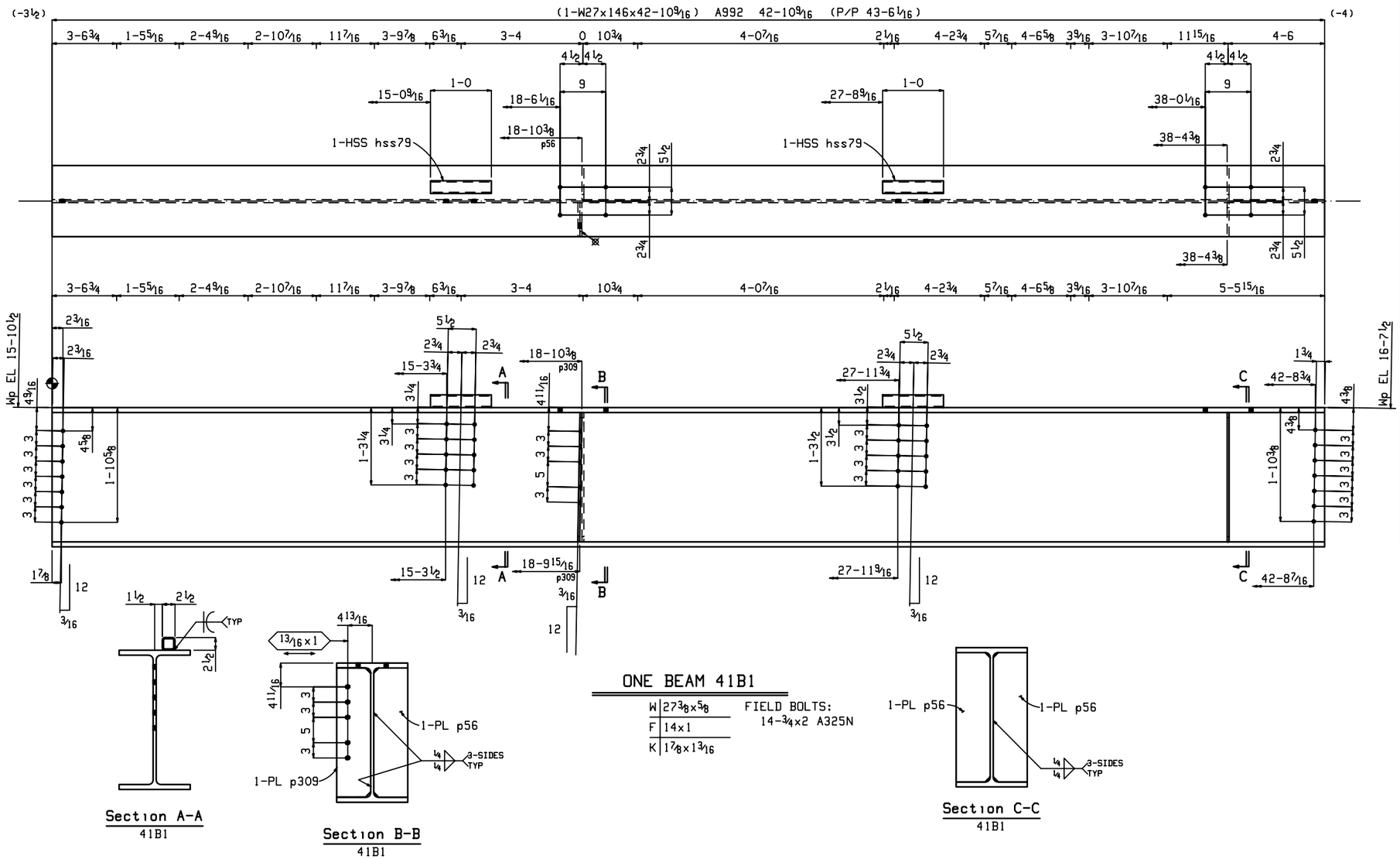

ONE BEAM 41B1

W	27 3/8 x 5/8
F	14 x 1
K	1 7/8 x 1 3/16

FIELD BOLTS:
14-3/4 x 2 A325N

BILL OF MATERIAL

QTY TOTAL	PC MARK	DESCRIPTION	LENGTH		REMARKS	STEEL GRADE
ONE	41B1	BEAM				
1	41B1	W27x146	42	10 9/16		A992
2	hss79	HSS2 1/2 x 2 1/2 x 1/4	1	0		A500B
3	p56	PL 3/8 x 6 11/16	2	1 7/16		A36
1	p309	PL 3/8 x 6 11/16	2	1 3/8		A36
		FIELD BOLTS				
14		3/4 Dia A325N	0	2	+1HD WASH	

MATERIAL:
1. ASTM A36 - TYP. U.N.O.
2. TUBES - ASTM 500 GRADE B
3. WIDE FLANGE BEAMS - ASTM A992
4. WELD ELECTRODES - E70XX

FINISH: ONE COAT SHOP PRIMER

SHOP BOLTS: 3/4 DIA A325 U.N.O

OPEN HOLES: 13/16 DIA U.N.O

REV	DATE	BY	DESCRIPTION
B	04-30-15	TAP	ISSUED FOR FABRICATION
A	03-17-15	TAP	ISSUED FOR APPROVAL

SAMPLE DRAWING

SHOPS OF KILDEER

ARCHITECT: | GEN. CONTR:

DATE: | SCALE: | DRAWN BY: | CHECKED BY:

TITLE: COLUMN DETAIL

SHEET NO. 41 | JOB NO.

BILL OF MATERIAL

QTY TOTAL	PC MARK	DESCRIPTION	LENGTH		REMARKS	STEEL GRADE
ONE	45B1	BEAM				
1	45B1	W14x48	25	8		A992
2	p61	PL3/8x7 7/8	0	8 1/2		A36
4	p74	PL3/8x7 7/8	0	8 1/2		A36
		FIELD BOLTS				
6		3/4 Dia A325N	0	1 3/4	+1HD WASH	

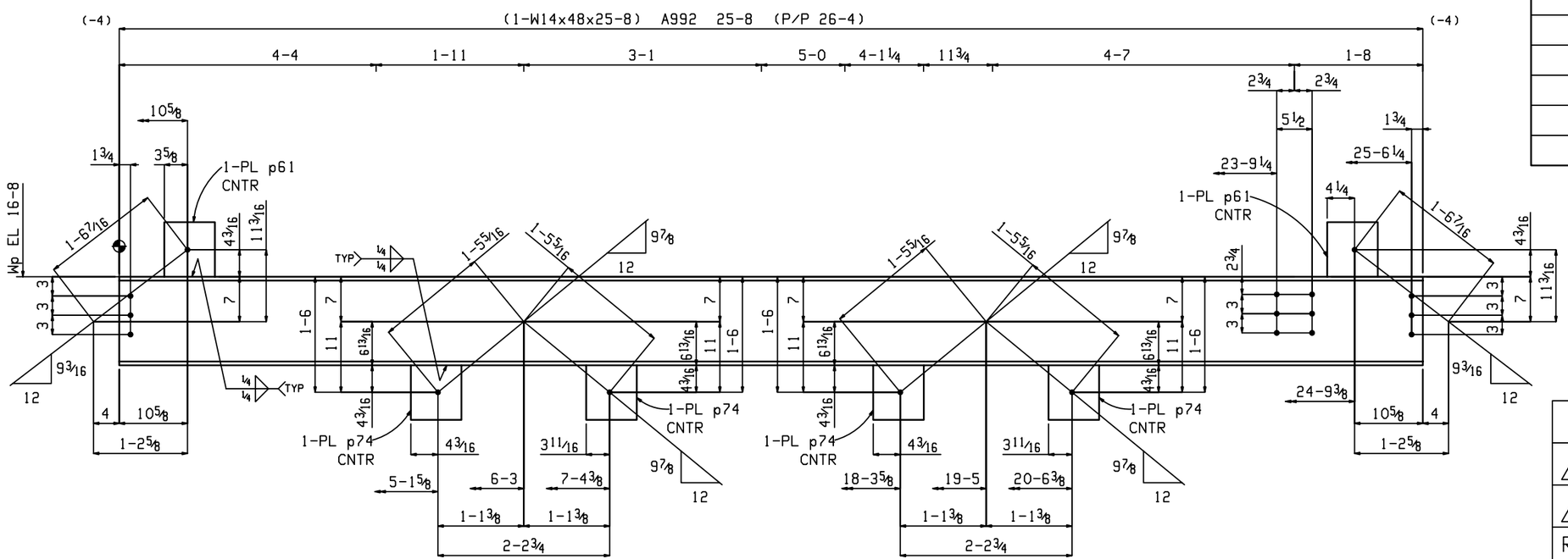

ONE BEAM 45B1

W	13 13/16 x 5/16
F	8 x 5/8
K	1 7/16 x 1

FIELD BOLTS:
6-3/4 x 1 3/4 A325N

MATERIAL:
1. ASTM A36 - TYP. U.N.O.
2. TUBES - ASTM 500 GRADE B
3. WIDE FLANGE BEAMS - ASTM A992
4. WELD ELECTRODES - E70XX

FINISH: ONE COAT SHOP PRIMER

SHOP BOLTS: 3/4 DIA A325 U.N.O

OPEN HOLES: 13/16 DIA U.N.O

REV	DATE	BY	DESCRIPTION
B	04-30-15	TAP	ISSUED FOR FABRICATION
A	03-17-15	TAP	ISSUED FOR APPROVAL

SAMPLE DRAWING

SHOPS OF KILDEER

ARCHITECT:
GEN. CONTR:
DATE:
SCALE:
DRAWN BY:
CHECKED BY:
TITLE: COLUMN DETAIL
SHEET NO. 45
JOB NO.

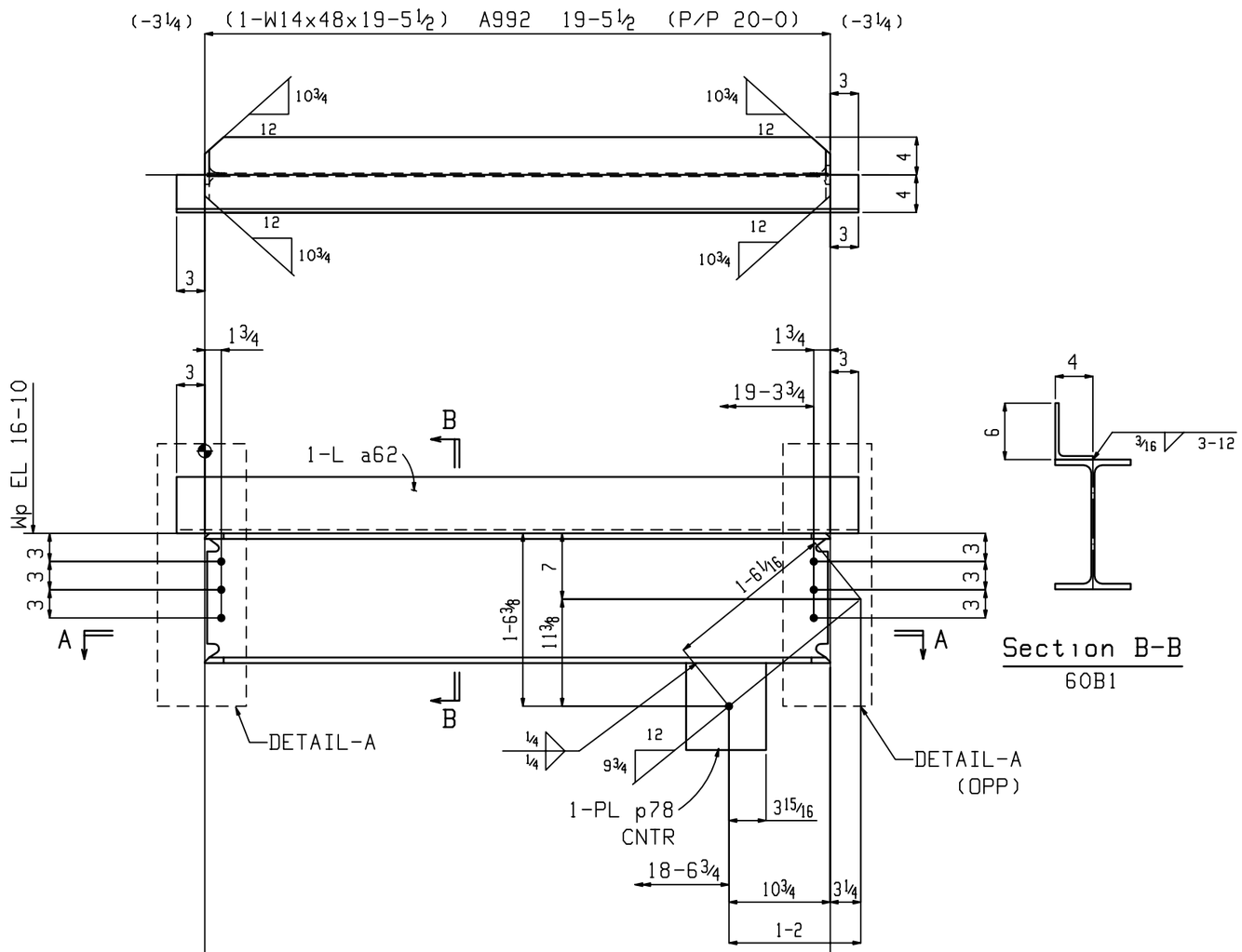

Section B-B
60B1

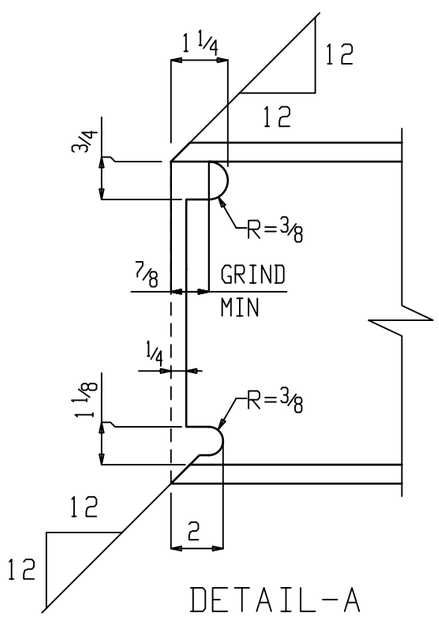

DETAIL-A

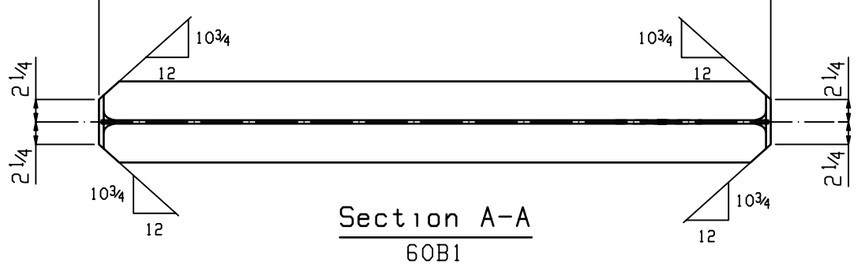

Section A-A
60B1

ONE BEAM 60B1

W	13¹³⁄₁₆ x ⁵⁄₁₆
F	8 x ⅝
K	1⁷⁄₁₆ x 1

FIELD BOLTS:
6-¾ x 1¾ A325N

MATERIAL:
1. ASTM A36 - TYP. U.N.O.
2. TUBES - ASTM 500 GRADE B
3. WIDE FLANGE BEAMS - ASTM A992
4. WELD ELECTRODES - E70XX

FINISH: ONE COAT SHOP PRIMER

SHOP BOLTS: ¾ DIA A325 U.N.O

OPEN HOLES: ¹³⁄₁₆ DIA U.N.O

BILL OF MATERIAL

QTY TOTAL	PC MARK	DESCRIPTION	LENGTH		REMARKS	STEEL GRADE
ONE	60B1	BEAM				
1	60B1	W14x48	19	5½		A992
1	a62	L6x4x⅜	19	11½		A36
1	p78	PL⅜x8½	0	9¼		A36
		FIELD BOLTS				
6		¾ Dia A325N	0	1¾	+1HD WASH	

REV	DATE	BY	DESCRIPTION
B	04-30-15	TAP	ISSUED FOR FABRICATION
A	03-17-15	TAP	ISSUED FOR APPROVAL

SAMPLE DRAWING

SHOPS OF KILDEER

ARCHITECT:		GEN. CONTR:	
DATE:	SCALE:	DRAWN BY:	CHECKED BY:
TITLE: COLUMN DETAIL			
SHEET NO. 60		JOB NO.	

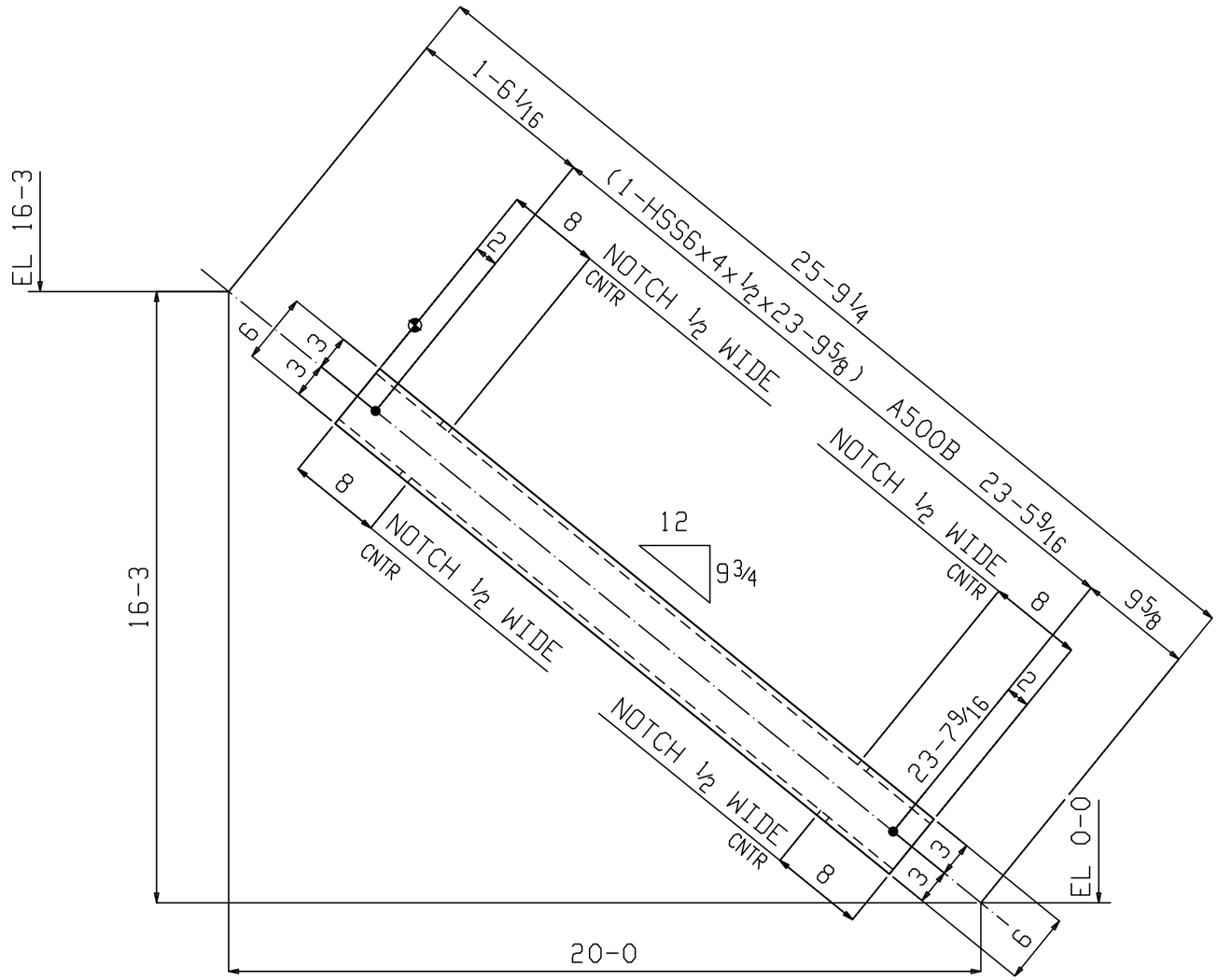

ONE VERTICAL BRACE 95VB1

FIELD BOLTS:
2-3/4x5 A307

BILL OF MATERIAL

QTY TOTAL	PC MARK	DESCRIPTION	LENGTH		REMARKS	STEEL GRADE
ONE	95VB1	VERTICAL BRACE				
1	95VB1	HSS6x4x1/2	23	9 5/8		A500B
		FIELD BOLTS				
2		3/4 Dia A307	0	5		

MATERIAL:
1. ASTM A36 - TYP. U.N.O.
2. TUBES - ASTM 500 GRADE B
3. WIDE FLANGE BEAMS - ASTM A992
4. WELD ELECTRODES - E70XX

FINISH: ONE COAT SHOP PRIMER

SHOP BOLTS: 3/4 DIA A325 U.N.O

OPEN HOLES: 13/16 DIA U.N.O

REV	DATE	BY	DESCRIPTION
B	04-30-15	TAP	ISSUED FOR FABRICATION
A	03-17-15	TAP	ISSUED FOR APPROVAL

SAMPLE DRAWING

SHOPS OF KILDEER

ARCHITECT:		GEN. CONTR:	
DATE:	SCALE:	DRAWN BY:	CHECKED BY:
TITLE: COLUMN DETAIL			
SHEET NO. 95		JOB NO.	

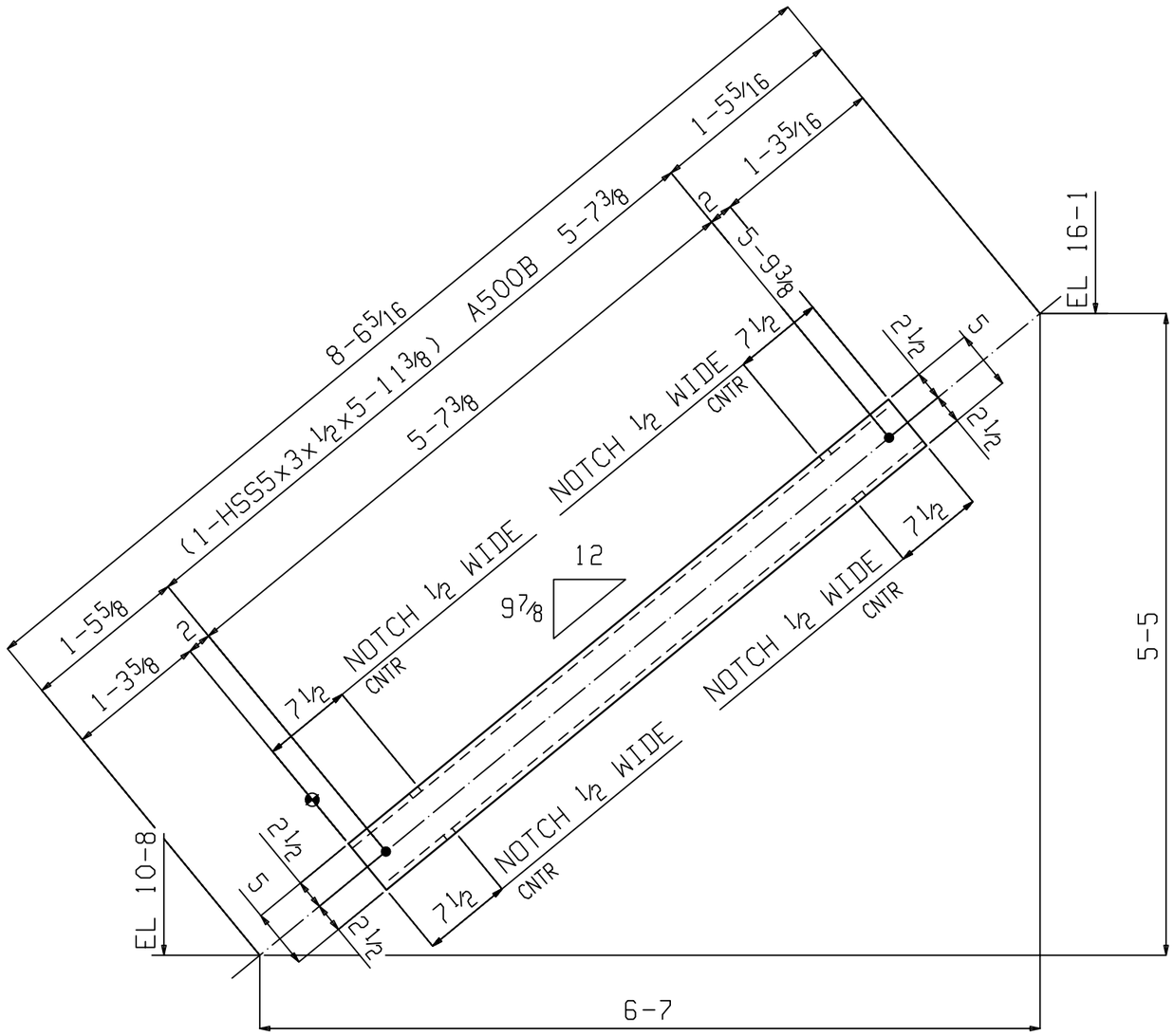

2 VERTICAL BRACES 101VB1

FIELD BOLTS:
2-3/4x4 1/4 A307

BILL OF MATERIAL

QTY TOTAL	PC MARK	DESCRIPTION	LENGTH		REMARKS	STEEL GRADE
2	101VB1	VERTICAL BRACE				
2	101VB1	HSS5x3x1/2	5	11 3/8		A500B
		FIELD BOLTS				
4		3/4 Dia A307	0	4 1/4		

MATERIAL:
1. ASTM A36 - TYP. U.N.O.
2. TUBES - ASTM 500 GRADE B
3. WIDE FLANGE BEAMS - ASTM A992
4. WELD ELECTRODES - E70XX

FINISH: ONE COAT SHOP PRIMER

SHOP BOLTS: 3/4 DIA A325 U.N.O

OPEN HOLES: 13/16 DIA U.N.O

REV	DATE	BY	DESCRIPTION
B	04-30-15	TAP	ISSUED FOR FABRICATION
A	03-17-15	TAP	ISSUED FOR APPROVAL

SAMPLE DRAWING

SHOPS OF KILDEER

ARCHITECT: | GEN. CONTR:

DATE: | SCALE: | DRAWN BY: | CHECKED BY:

TITLE: COLUMN DETAIL

SHEET NO. 101 | JOB NO.

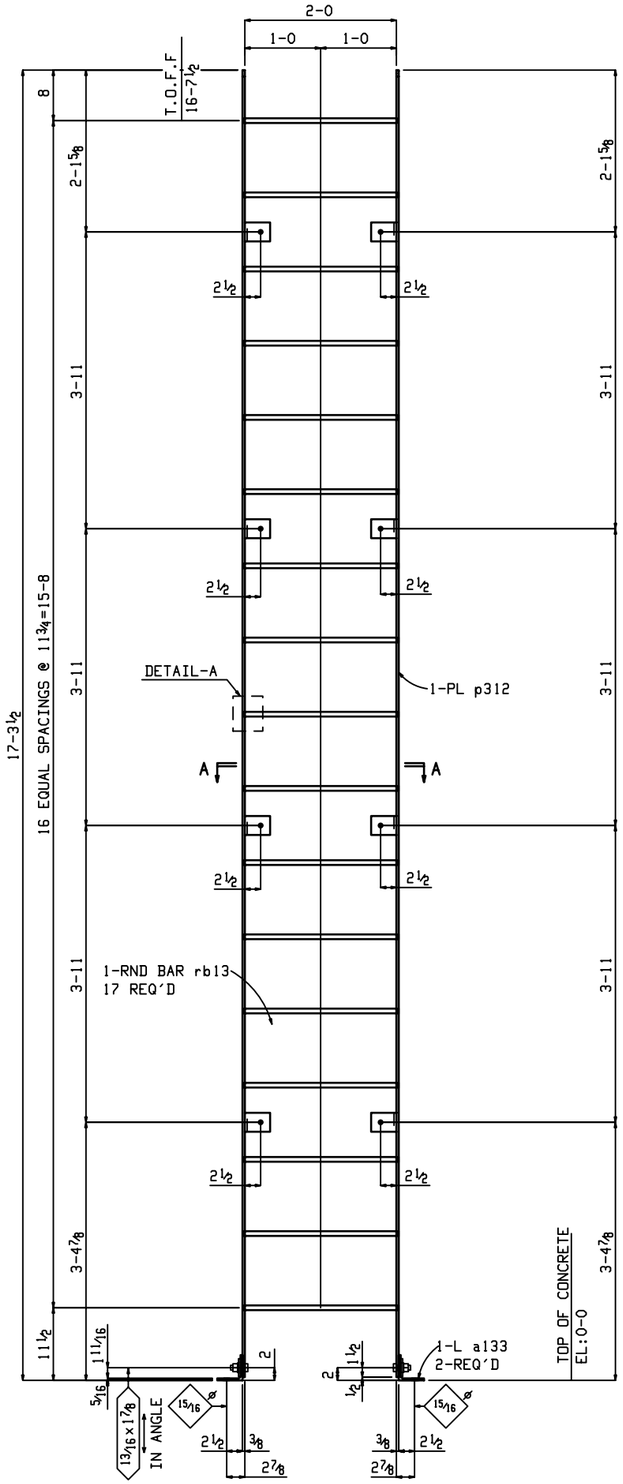

ONE MISC 134LD1

SHOP BOLTS:
2-¾x2¼ A325N

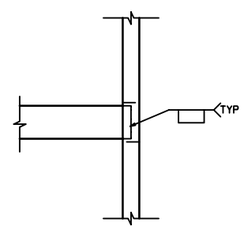

DETAIL-A

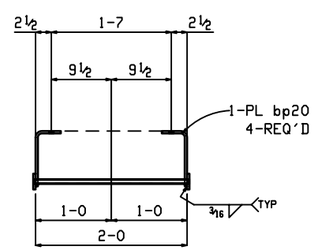

Section A-A
134LD1

BILL OF MATERIAL

QTY TOTAL	PC MARK	DESCRIPTION	LENGTH		REMARKS	STEEL GRADE
ONE	134LD1	MISC				
1	134LD1	PL⅜x2½	17	3		A36
2	a133	L4x4x5/16	0	2½		A36
8	bp20	PL⅜x12	0	3	BENT	A36
1	p312	PL⅜x2½	17	3		A36
17	rb13	RB¾	2	0⅜		A36
2		¾ Dia A325N	0	2¼	+1PL,1HD WASH	

MATERIAL:
1. ASTM A36 - TYP. U.N.O.
2. TUBES - ASTM 500 GRADE B
3. WIDE FLANGE BEAMS - ASTM A992
4. WELD ELECTRODES - E70XX

FINISH: ONE COAT SHOP PRIMER

SHOP BOLTS: ¾ DIA A325 U.N.O

OPEN HOLES: 13/16 DIA U.N.O

REV	DATE	BY	DESCRIPTION
B	04-30-15	TAP	ISSUED FOR FABRICATION
A	03-17-15	TAP	ISSUED FOR APPROVAL

SAMPLE DRAWING

SHOPS OF KILDEER

ARCHITECT: | GEN. CONTR:

DATE: | SCALE: | DRAWN BY: | CHECKED BY:

TITLE: COLUMN DETAIL

SHEET NO. 134 | JOB NO.

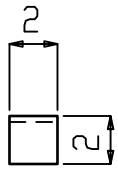

14 L2x2x¼x0-2 a3

GRADE: A36

HOLES: 13/16 DIA U.N.O	SAMPLE DRAWING	DRAWN BY
		DATE.
PROJECT: SHOPS OF KILDEER	ARCHITECT:	JOB No.
LOCATION:	CONTRACTOR: -	SHEET No. a3

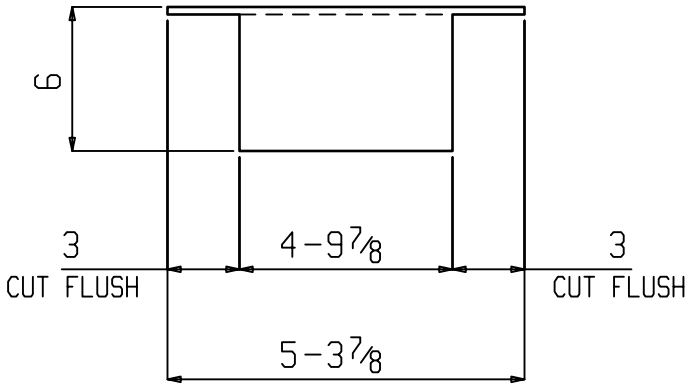

2 L6x4x5/16x5-3 7/8 a135

GRADE: A36

HOLES: 13/16 DIA U.N.O	SAMPLE DRAWING	DRAWN BY
		DATE.
PROJECT: SHOPS OF KILDEER	ARCHITECT:	JOB No.
LOCATION:	CONTRACTOR: -	SHEET No. a135

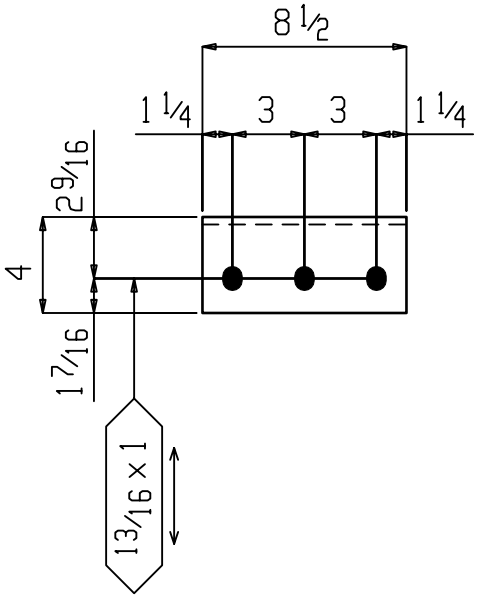

18 L4x4x5/16x0-8 1/2 a156

GRADE: A36

HOLES: 13/16 DIA U.N.O	SAMPLE DRAWING	DRAWN BY
		DATE.
PROJECT: SHOPS OF KILDEER	ARCHITECT:	JOB No.
LOCATION:	CONTRACTOR: -	SHEET No. a156

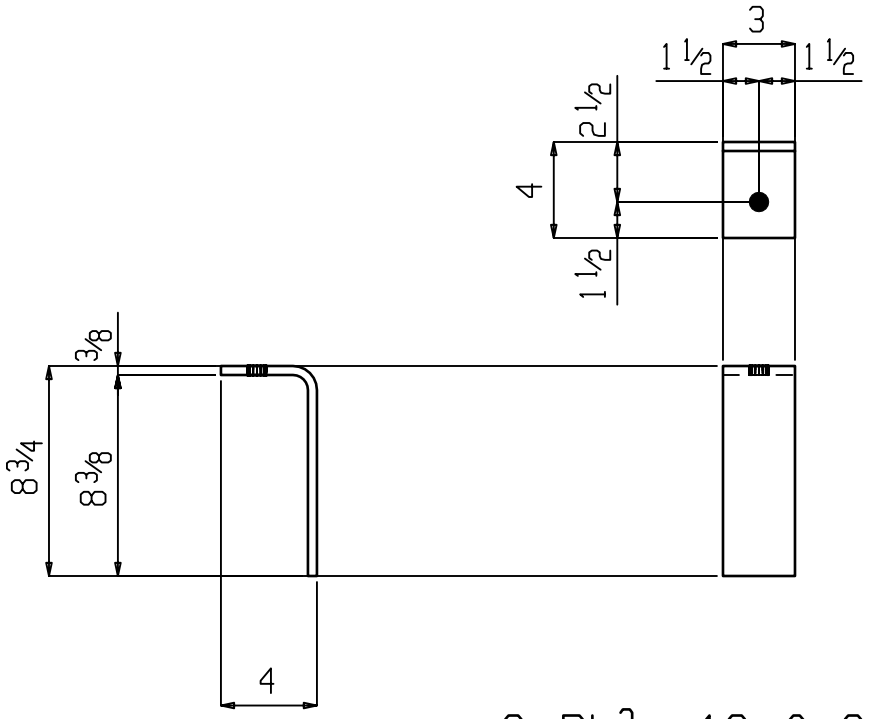

8 PL 3/8 x 12 x 0-3 bp20

GRADE: A36

HOLES: 13/16 DIA U.N.O	SAMPLE DRAWING	DRAWN BY
		DATE.
PROJECT: SHOPS OF KILDEER	ARCHITECT:	JOB No.
LOCATION:	CONTRACTOR: -	SHEET No. bp20

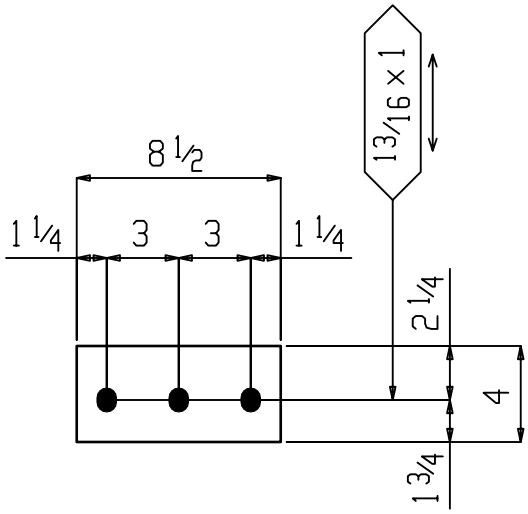

46 FL 3/8 x 4 x 0-8 1/2 f3

GRADE: A36

HOLES: 13/16 DIA U.N.O	SAMPLE DRAWING	DRAWN BY
		DATE.
PROJECT: SHOPS OF KILDEER	ARCHITECT:	JOB No.
LOCATION:	CONTRACTOR: -	SHEET No. f3

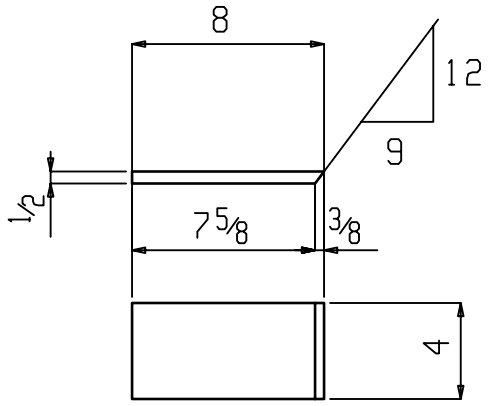

7 FL 1/2 x 4 x 0-8 f10

GRADE: A36

HOLES: 13/16 DIA U.N.O	SAMPLE DRAWING	DRAWN BY
		DATE.
PROJECT: SHOPS OF KILDEER	ARCHITECT:	JOB No.
LOCATION:	CONTRACTOR: -	SHEET No. f10

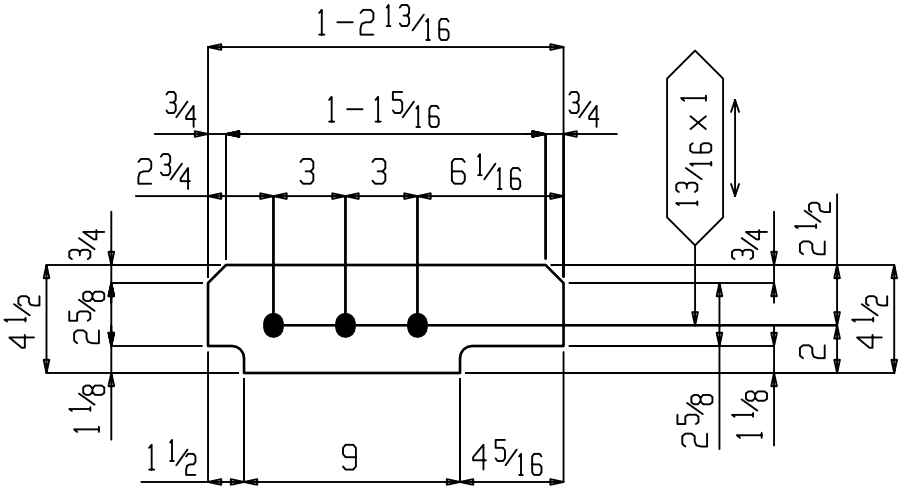

ONE FL 3/8 x 4 1/2 x 1-2 13/16 f23

GRADE: A36

HOLES: 13/16 DIA U.N.O	SAMPLE DRAWING	DRAWN BY
		DATE.
PROJECT: SHOPS OF KILDEER	ARCHITECT:	JOB No.
LOCATION:	CONTRACTOR: -	SHEET No. f23

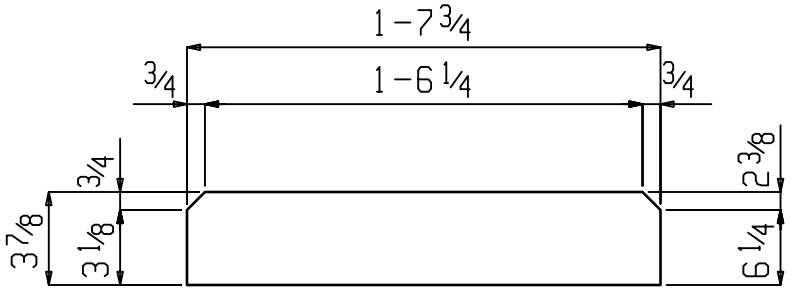

16 PL 3/8 x 3 7/8 x 1-7 3/4 p59

GRADE: A36

HOLES: 13/16 DIA U.N.O	SAMPLE DRAWING	DRAWN BY
		DATE.
PROJECT: SHOPS OF KILDEER	ARCHITECT:	JOB No.
LOCATION:	CONTRACTOR: -	SHEET No. p59

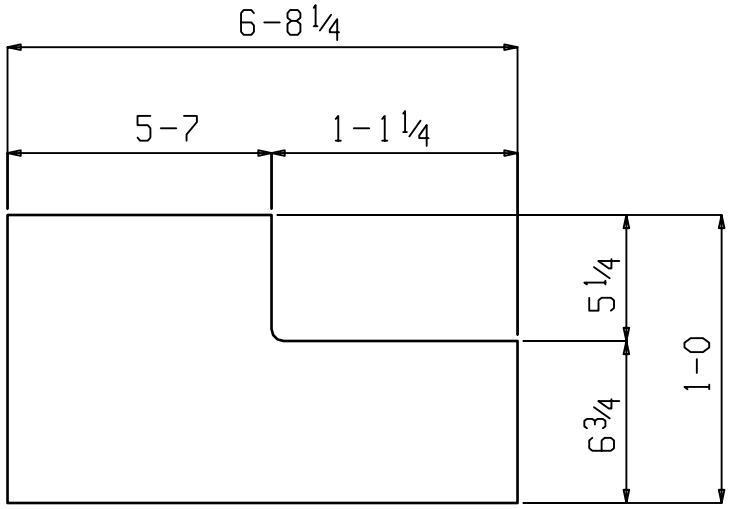

ONE PL 5/16 x 12 x 6-8 1/4 p194

GRADE: A36

HOLES: 13/16 DIA U.N.O	SAMPLE DRAWING	DRAWN BY
		DATE.
PROJECT: SHOPS OF KILDEER	ARCHITECT:	JOB No.
LOCATION:	CONTRACTOR: -	SHEET No. p194